STA. 1301+20.00
R-24W
OVER SKUNK RIVER · WASHINGTON TOWNSHIP

IN LETTING OF MARCH 5, 1963

DUAL 320' X 30' CONTINUOUS WELDED GIRDER BRIDGES 20° SKEW

ESTIMATE OF QUANTITIES

ITEM	UNIT	TOTAL
Concrete	Cu. Yds.	1,272.0
Reinforcing Steel	Lbs.	~~267,444~~ 267350
Structural Steel	Lbs.	~~519,468~~ 572,310
Class 10 Channel Excavation	Cu. Yds.	1,600
Class 20 Excavation	Cu. Yds.	888
Class 21 Excavation	Cu. Yds.	520
Creosoted Piling 96 at 35'	Lin. Ft.	3,360
Untreated Piling (Oak or Cumwood) 192 at 35'	Lin. Ft.	6,720
OR ~~Aluminum Handrail (℄ - ℄ End Posts)~~	~~Lin. Ft.~~	~~1246.0~~
Steel Handrail (℄ - ℄ End Posts)	Lin. Ft.	1254.0
Granular Backfill	Tons	897
Welded Wire Fabric Retard (℄ - ℄ End Piles includes Wingdams)	Lin. Ft.	840
Porous Backfill	Cu. Yds.	46

STATE OF IOWA
STATE HIGHWAY COMMISSION
DESIGN FOR
BRIDGES AND CULVERTS
PRIMARY ROAD SYSTEM
PROJECT NO. FU-1065(10)
STORY COUNTY
JANUARY, 1963

[redacted]

CONSTRUCTION PLANS SHOWING PROJECT AS BUILT

DATE 3-4-64 COPIES PREPARED 3

PREPARED BY Graeme C. George
RESIDENT ENGINEER

ONE COPY APPROVED & FORWARDED TO AMES
DIST. ENGR. _____ DATE.
TWO COPIES TO BE MADE & RETURNED TO:---
STEINER SILENCE DIST. ENGR.
ROBERT SHELQUIST RES. MAINT ENGR.

1 40

DESIGN NO. 3261 T-83N R-24W
SECTION 14
U.S. #30 RELOC. OVER U.S. #69
STA. 1258+95.48 EAST BOUND LANE
STA. 1259+02.23 WEST BOUND LANE
WASHINGTON TOWNSHIP

IN LETTING OF MARCH 5, 1963

DUAL 211'-3 X 30' & VARIABLE ROADWAY PRETENSIONED PRESTRESSED CONCRETE BEAM BRIDGES 5° 31' SKEW

ESTIMATE OF QUANTITIES

ITEM		UNIT	TOTAL
Concrete		Cu. Yds.	~~901.6~~ 907.3
Reinforcing Steel	199,115 ~~198663~~	Lbs.	~~97,294~~
Pretensioned	38' - 4" Special	Only	17
Prestressed	42' - 6" B1	Only	18
Concrete Beams	63' - 4" B6	Only	35
Creosoted Piling 169 at ~~38'~~; 30 at ~~40'~~; 33 at ~~45'~~; 7 at 16		Lin. Ft.	4905 ~~7755~~ ~~7867~~
OR Aluminum Handrail (℄ - ℄ End Posts)		Lin. Ft.	OR 814.6
~~Steel Handrail (℄ - ℄ End Posts)~~		Lin. Ft.	~~814.0~~
Concrete Slope Protection		Sq. Yds.	~~894~~ 892
Class 20 Excavation		Cu. Yds.	756
Granular Backfill		Tons	285
4" Φ Tile Drain		Lin. Ft.	263
2" Φ Rigid Steel Conduit		Lin. Ft.	450*
Creosoted Test Piling	2 at 30'	L.S.	Lump Sum

* Includes 12 Lin. Ft. of 1" Φ Rigid Steel Conduit

IN LETTING OF MARCH 5, 1963

DESIGN	LOCATION: SECTION	TOWNSHIP	STATION	DESCRIPTION: SIZE AND TYPE	ESTIMATE OF QUANTITIES: CONCRETE CUBIC YARDS	REINFORCING STEEL LBS.	EXCAVATION -- CUBIC YARDS: CLASS 20	CLASS 24		CLASS 10 CHANNEL		REMOVALS
3361	14	WASHINGTON	1249+85	6' X 4' X 254' Reinf. Conc. Box Culv. 30° Skew	204.0	20,743	426					
				TOTALS	204.0	20,743	426					

SPECIFICATIONS

CONSTRUCTION: Standard Specifications of the Iowa State Highway Commission, Series of 1960, plus current Supplemental Specifications and Special Provisions.

DESIGN STRESSES for the following materials are in accordance with A.A.S.H.O. Standard Specifications, Series of 1961.

Reinforcing Steel in accordance with Section 1.4.12 "Reinforcement" for Intermediate, Hard, or Rail Steel Grade.

Concrete in accordance with Section 1.4.11 f'c = 3500 p.s.i.

Prestressed Concrete in accordance with Section 1.13.7 f'c = 5000 psi.

Prestressing Steel in accordance with Section 1.13.7 f's = 250,000 psi.

Design stresses for Structural Steel (A-36) to be in accordance with the Bureau of Public Roads Circular Memorandum entitled, "Unit Stresses for A.S.T.M. A-36 Carbon Steel and for Rivets and Bolts", dated August 17, 1962.

These bridges ~~will~~ require Bridge Sign Assemblies furnished and placed by others as specified in Traffic and Highway Planning Instruction No. 11, Revised October 1, 1961.

45-Sheets

FU-1065(10) APRIL-1963 STEL

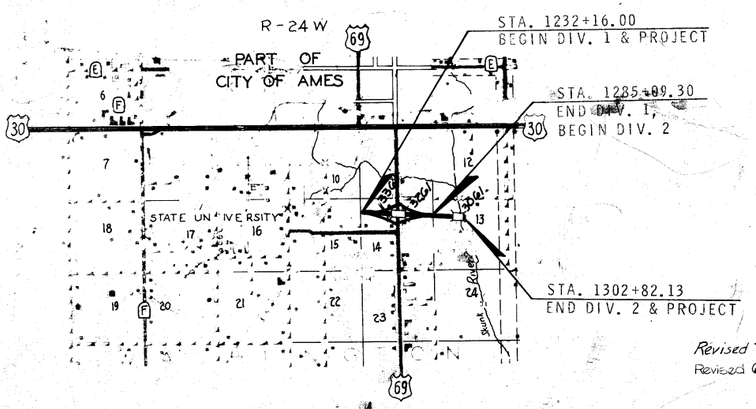

LAYOUT
SCALE 1" = 1 MILE

MILEAGE SUMMARY		105-1	
DIV.	LOCATION	LIN. FT.	MILES
	BRIDGE AT STA. 1258+98.85	214.094	.040
	BRIDGE AT STA. 1301+20.00	324.792	.062
	TOTAL		.102

R. M. Smith
DEPUTY

DIVISION

Revised 7-22-63: Sheet 7a of 23 Design 3261 added for corrected footing layout, quantities changed on sheets 1 and 7 of 23.
Revised 6-10-63 Design 3261: Number and weight of bars 5g1 corrected on Sh.# 2 & 3 of 23.
Number and weight of bars 5c1 & 5c2-7 corrected on Sh.# 6 of 23.
Revised 5-6-63 Design 3061: Structural Steel quantity corrected on Sheets 1 & 10
Revised 2-27-63 Design 3061: Structural Carbon Steel designation changed for minor members; Notes on Sheets 1 & 11 changed.

Story US 30 #7

COUNTY STORY PROJECT NO. FU-1065 (10) FILE NO. 21503

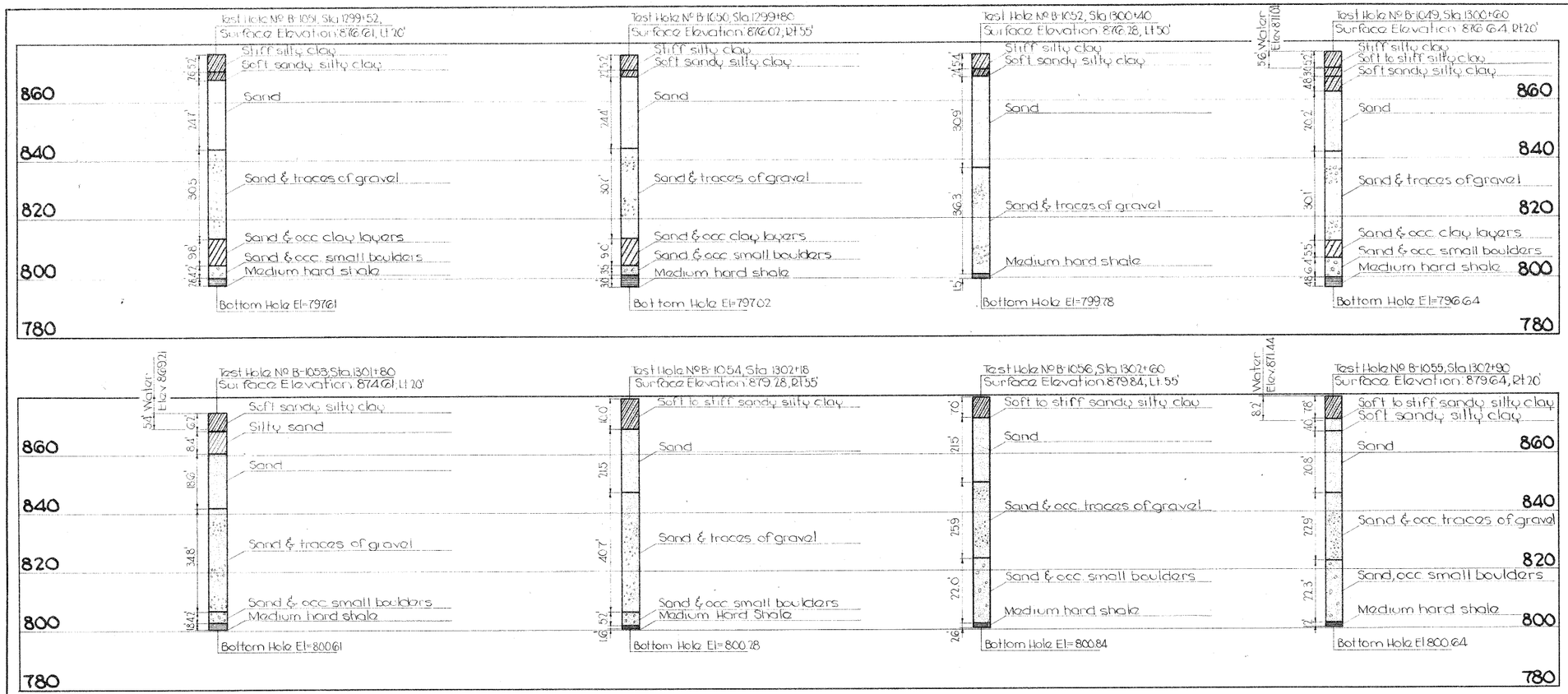

~~Bench Mark Nº 23, Sta 1300+91 Rt spike in E side of 15" Willow 122' Rt Elev 878.15~~

Bench Marks: N ≠ 23B Sta 1299+80 I.H.C. B.M. on S.W. wing E.B. Bridge. Elev. 891.75
N ≠ 24B Sta. 1302+60 I.H.C. B.M. on N. E. wing W.B. Bridge. Elev. 891.74

S O U N D I N G D A T A

Dated: 2-14-62

GENERAL NOTES:

These bridges were ~~are~~ designed for H20-S16 loading plus an allowance of 19 lb per square foot of roadway for future wearing surface.

Approach fills were ~~are~~ not a part of this contract but are to be in place before abutment piles are driven. The Bridge Contractor ~~is to~~ level and shape the berms to the elevations and dimensions shown in the plans.

The Bridge Contractor ~~is to~~ clear the channel to 65 feet on each side of the ℄ survey as indicated by the cross hatched areas on the Situation Plan and Longitudinal Sections, sheet 4. The excavating quantities for the piers were ~~are~~ based on the assumption that the channel clearance ~~will be~~ completed before the construction of the piers was ~~is~~ begun.

The dirt from the channel clearance and footing excavation ~~shall be~~ deposited in the waste area shown on the General Plan, sheet 2, ~~or as directed by the Engineer.~~

The construction of the wing dikes and the remainder of the channel clearance ~~is to be~~ done by others and was ~~is~~ not a part of this contract.

The formed beam guardrail and creosoted posts at the ends of the bridges were ~~are~~ to be furnished and placed by others and were ~~are~~ not a part of this contract.

A test-load pile was ~~is to be~~ driven at Pier 1 of the Eastbound Lane. For the location and the driving and testing procedure see details on sheet 2. The Bridge Contractor was ~~is to~~ co-operated with the Engineer in the performance of this test and was ~~is to~~ assist in setting and removing the test beam. The cost of this work was ~~is~~ considered incidental to the driving of the footing piles and no separate payment will be ~~will be~~ made for this work or for delays caused by testing.

Untreated piling for pier footings ~~shall be either~~ oak ~~or~~ gumwood.

The bid item "Welded Wire Fabric Retard" ~~shall~~ includes the cost of all labor, excavation, furnishing and driving piling, materials, and other incidental items necessary for the construction of the retard and wingdams. The 1" ϕ and 3/4" ϕ cable ~~shall be~~ was furnished by the I.S.H.C., see sheet 3.

SPECIFICATIONS:

Design: A.A.S.H.O. Series of 1961 plus U.S.B.P.R. Circular memo dated August 17, 1962, "Unit Stresses for ASTM A-36 Carbon Steel."

Design stresses for:

Reinforcing Steel in accordance with Sec. 1.4.12 "Reinforcement for intermediate, hard, or rail steel grade," A.A.S.H.O.

Concrete in accordance with Sec. 1.4.11 f'c = 3500 p.s.i. A.A.S.H.O.

Structural Steel: ~~All structural steel in accordance with U.S. B.P.R. Circular Memo 8-17-62 "Unit stresses for A.S.T.M. A-36 Carbon Steel."~~ Flange and web plates of main and floor beam girders, stringers, bearing stiffeners, and splice plates in accordance with USBPR Circular Memo 8-17-62 "Unit Stresses for A.S.T.M. A36 Carbon Steel." All other steel in accordance with Sec. 1.4.2 A.A.S.H.O.

Construction: I.S.H.C. Standard Specifications Series of 1960, plus current special provisions and supplemental specifications.

Revised 5-6-63: Structural Steel quantity corrected.

Revised 2-27-63: Specifications Note changed to include different carbon steels.

TOTAL ESTIMATED QUANTITIES

Items	4-Abuts.	4-Piers	2-Superst.	Totals
Concrete	317.6	324.0	630.4	1,272.0 cy
Reinforcing Steel	30,148	39,768	197,528	~~267,444~~ 267,335-0
Structural Steel			519,478 572,310	519,478 572,310
Class 10 Channel Excavation				1600 cy
Class 20 Excavation	748	140		888 cy
Class 21 Excavation		520		520 cy
Creosoted Piling	96@35'			3,360 LF
Untreated Piling (Oak or Gumwood)		192@35'		6,720 LF
~~Aluminum Handrail (℄ & End Posts)~~				~~12,480 LF~~
or Steel Handrail (℄ & End Posts)				12,540 LF
Granular Backfill	897			897 Tons
Welded Wire Fabric Retard (℄ & End Piles - Includes wingdams)				840 LF
Porous Backfill	40			40 cy

Note: ~~Superstructure reinforcing steel quantity is based on the use of Aluminum Handrail.~~ (See sheet 10)

LOCATION:
Story County
T-83-N, R-24-W
Washington Twp.
Section 13
U.S. Nº 30 over
Skunk River

DESIGN FOR 20° SKEW

DUAL 320'-0 x 30' CONTINUOUS WELDED GIRDER BRIDGES AND WELDED WIRE RETARD

97'-6 End Spans — 125'-0 Interior Span

CONCRETE FLOOR & SUBSTRUCTURE — Tubular HAND RAIL

SOUNDING DATA

STATION: 1301+20.00 — Project Nº FU-10-65(10)

STORY COUNTY

IOWA — STATE — HIGHWAY — COMMISSION

December 1962 — SHEET 1 OF 15

DESIGN Nº 3061 — STORY COUNTY — FILE Nº 21508

~~Bench Mark No 23, Sta 1300+91, P.P. spike in E. side 15" Willow, 122' Rt. Elev. 878.13~~
Bench Marks No 23B Sta. 1299+80 I.H.C. B.M. on S.W. wing E.B. Bridge Elev. 891.75
No 24B Sta. 1302+60 I.H.C. B.M. on N.E. wing W.B. Bridge Elev. 891.74

PILE NOTES FOR TEST LOAD: (REFER TO SKETCH)

Test load one pile only for Pier 1 East Bound Lane. For pile notes and details not shown see Pier Details, sheet 7

~~Drive~~ Prove all footing pile as shown, except test-load pile. ~~Drive~~ Prove test-load pile to 20±1 ton. Top of anchor piles ~~are to be~~ left 3ft above bottom of footing. ~~Pile to be test-loaded shall be~~ Test load piles must be driven without jetting.

The Resident Construction Engineer ~~will~~ notify the Materials Engineer in Ames when test-load pile has been ready for loading.

Statically load test-load pile to yield point as described in Article 2501.14 of the Standard Specifications.

After testing, the test-load pile and the anchor piles ~~shall be~~ were cut off to proper elevation and ~~shall be~~ left in acceptable condition for footing support.

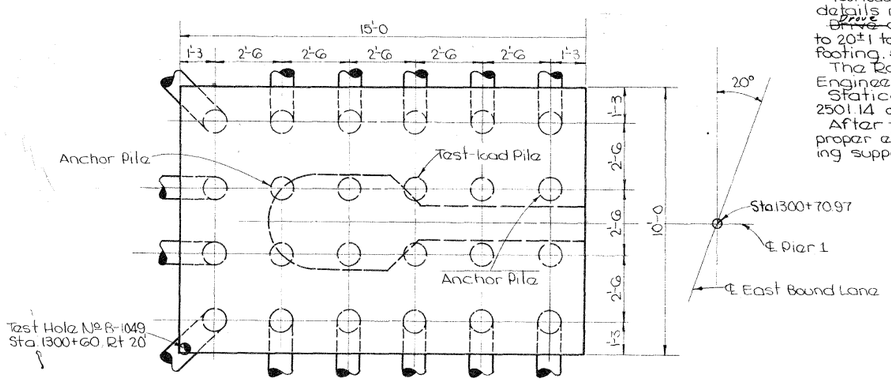

PILE LAYOUT

Pier 1 East Bound Lane
Bottom Footing El.=860.00,
showing pile designated
for test loading.

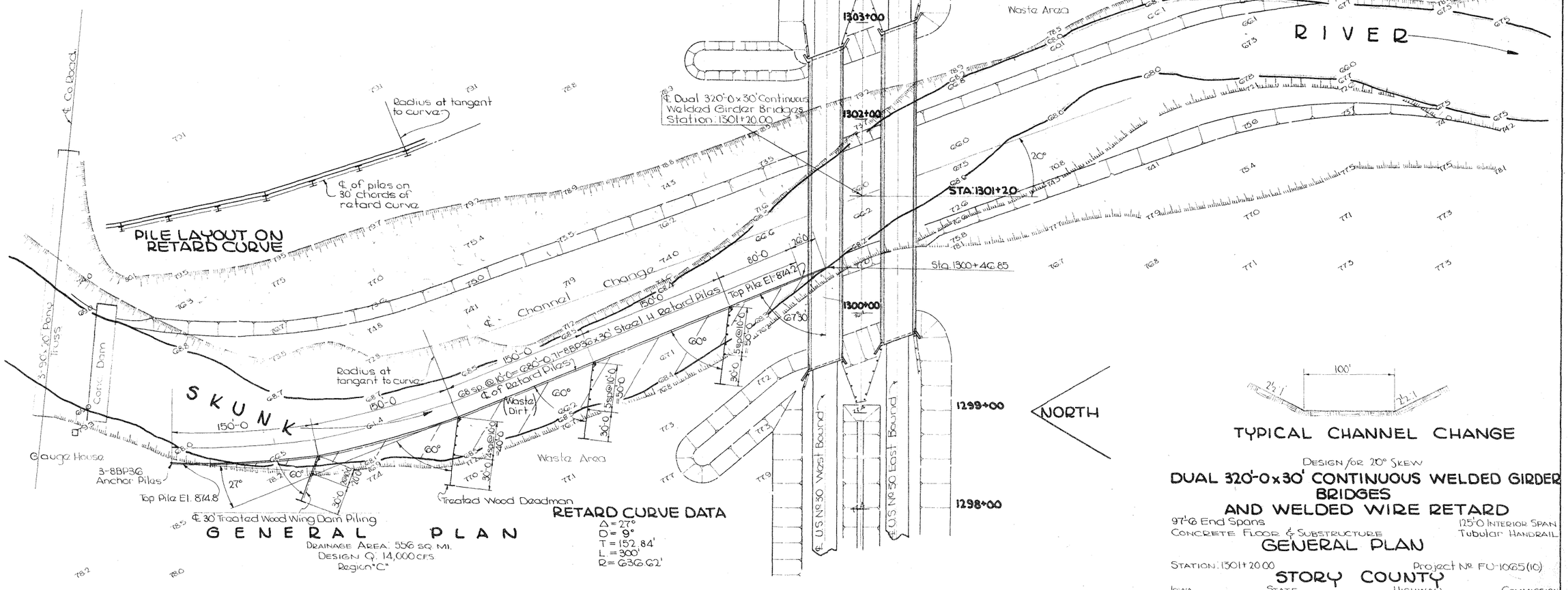

GENERAL PLAN

Drainage Area: 556 sq. mi.
Design Q: 14,000 cfs
Region "C"

RETARD CURVE DATA

Δ = 27°
D = 9°
T = 152.84'
L = 300'
R = 636.62'

Design for 20° Skew

DUAL 320'-0 x 30' CONTINUOUS WELDED GIRDER BRIDGES AND WELDED WIRE RETARD

97'-6 End Spans — 125'-0 Interior Span
Concrete Floor & Substructure — Tubular Handrail

GENERAL PLAN

Station: 1301+20.00 — Project No FU-1065(10)

STORY COUNTY

Iowa State Highway Commission
December 1962 — Sheet 2 of 15

Design No 3061 — Story County — File No 21508

DIETZGEN NO. 131 ARKWRIGHT

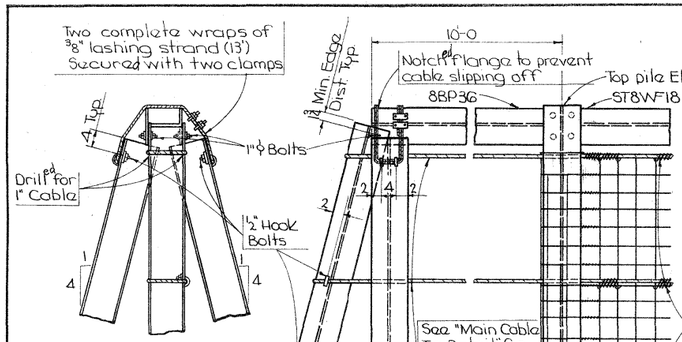

END VIEW

REAR ELEVATION OF ANCHOR PILES

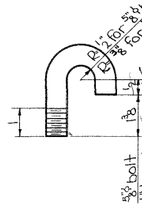

HOOK BOLT DETAIL

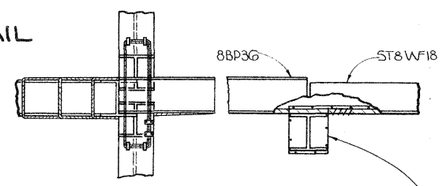

PLAN OF ANCHOR PILES

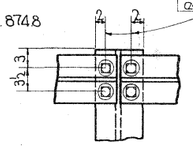

TYPICAL TIE SPLICE

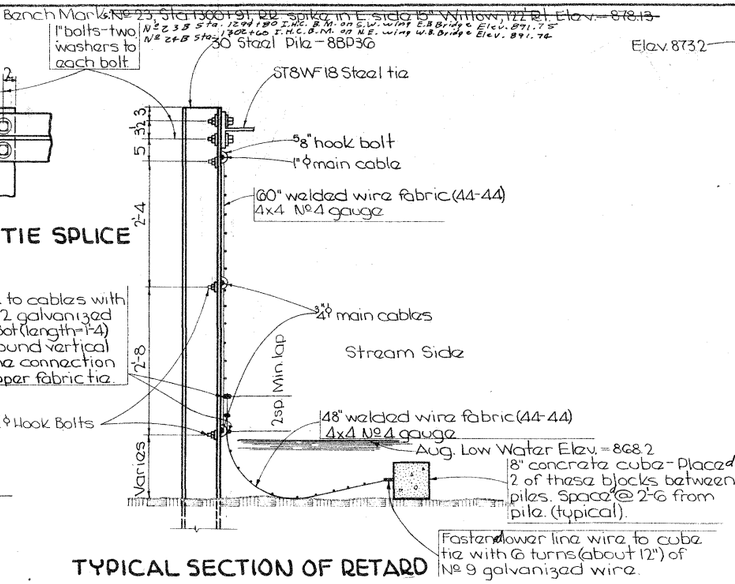

TYPICAL SECTION OF RETARD

Fasten fabric to cables with 3 turns of No 12 galvanized wire every foot (length = 1'-4). Loop ends around vertical wire. Use same connection for lower to upper fabric tie.

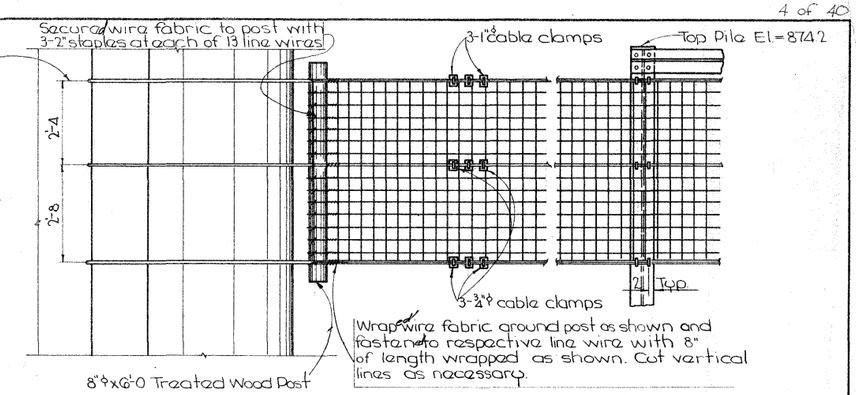

ELEVATION OF PIER ANCHOR

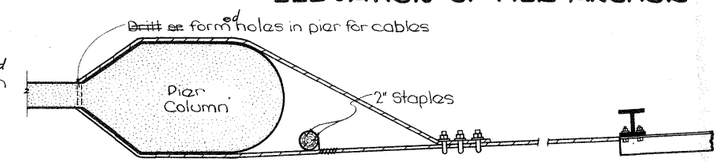

PLAN OF PIER ANCHOR

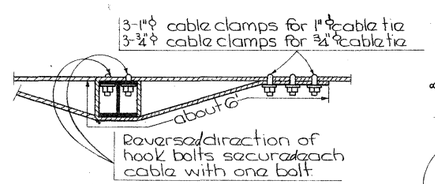

MAIN CABLE TIE DETAIL

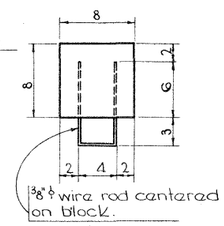

BLOCK WEIGHT DETAIL

RETARD NOTES:

All holes in steel tie ~~are to be field drilled or~~ were field burned.

Fasten steel tie to each pile with four 1"φ bolts. Provide two washers for each bolt.

ST8WF18 Steel ties ~~are to be~~ were furnished in 30' lengths except one 20' length is required at each end. One 10' section of 8BP36 Steel H-pile is required for tie on anchor pile end.

Fasten main cables to piles, with two hook bolts per cable at tie splice points and with one hook bolt per cable at intermediate piles. Furnish one washer with each hook bolt.

Main cables ~~are to be~~ were run continuously for maximum of nine pile spaces and are fastened as shown.

Steel H piles ~~are to be~~ were driven to full penetration ~~if practicable~~. Top of pile elevations are shown on sheet 1 for end piles. Tops of intermediate piles are on a straight line between tops of end piles.

All hardware is ~~to be~~ was galvanized.

The 1"φ and 3/4"φ cable ~~is to be~~ were furnished by the I.S.H.C. Maintenance Yard at Ames. The contractor ~~is to~~ shall haul the cable to site and return unused cable to Maintenance Yard. Cost of hauling ~~to be~~ was included in price bid for "Welded Wire Fabric Retard."

BILL OF MATERIAL FOR WIRE FABRIC RETARD

ITEM		QUANTITY
ST8WF18 Steel Ties	21@30', 2@20'	670 L.F.
Steel H Piles 8BP36	furnish 71@30', 1@10'	2140 L.F.
	drive 71@30'	2130 L.F.
Creosoted Piles	16@30'	480 L.F.
60" 44-44 Welded Wire Fabric (approx. length)		890 L.F.
48" " " " " " "		683 L.F.
* 1"φ Main Cable		1150 L.F.
* 3/4"φ " "		2300 L.F.
1"φ Cable Clamps		200 ~~72~~ ~~126~~
3/4"φ " "		~~144~~ 208
3/8"φ Lashing Strand (approx. length)		517 L.F.
1/2"x6" Boat Spikes		288
5/8"φ Hook Bolts (includes one washer each bolt)		92
1/2"φ Hook Bolts " " " " "		190
2" Staples		247
Treated Wood Deadman		40 L.F.
1"φ x 3" Bolts (includes two washers each bolt)		274
8"φ x 6'-0 Treated Wood Post		6 L.F.
8" Concrete Block Weights		134
No 9 Wire, Galvanized		184 L.F.
No 12 Wire, Galvanized		4255 L.F.
3/8"φ Cable Clamps		2
* Furnished by I.S.H.C. See Retard Notes above		

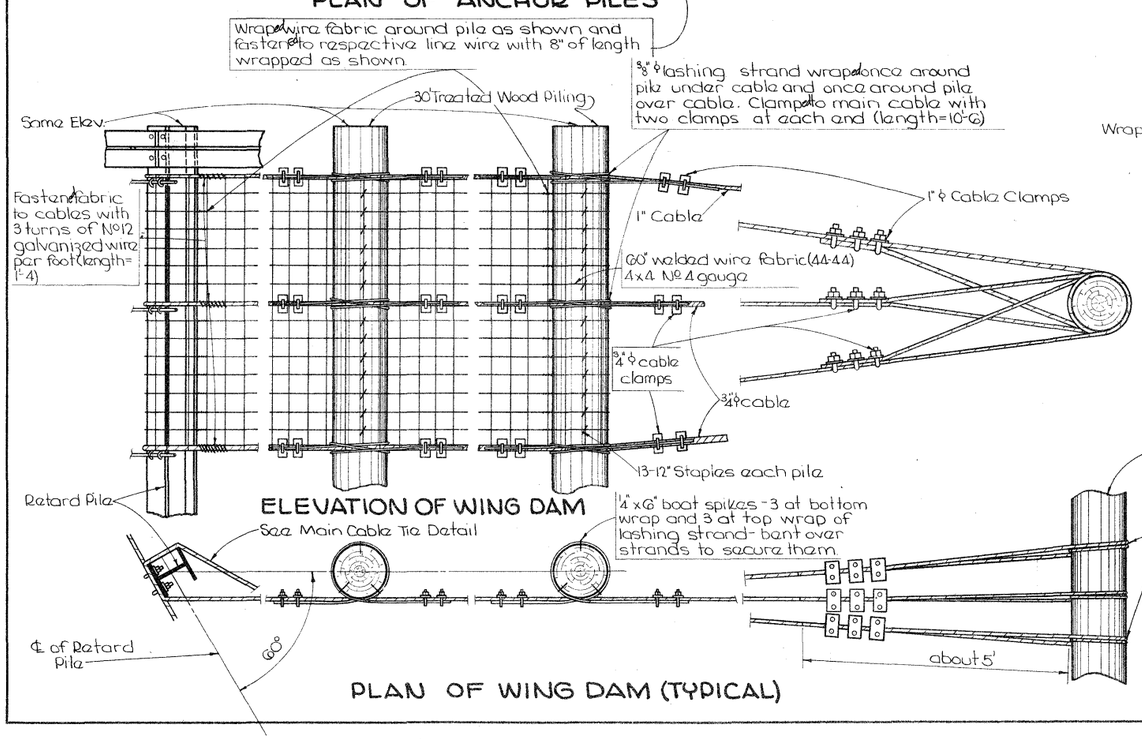

ELEVATION OF WING DAM

PLAN OF WING DAM (TYPICAL)

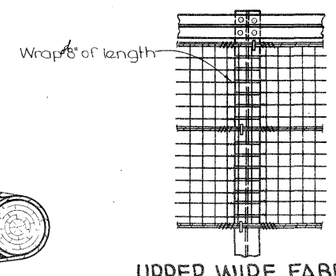

UPPER WIRE FABRIC SPLICE DETAIL

Fence ~~may be~~ was spliced where necessary at a pile by:
1. Wrapping one turn of first fence around pile and fastening each line wire to its respective wire.
2. Cutting vertical lines of second fence and following step 1 above.

EST. QUAN. RETARD

Item	Quantity
Welded Wire Fabric Retard (℄ & End Posts - Includes wingdams)	840 L.F.

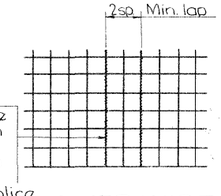

LOWER WIRE FABRIC SPLICE DETAIL

DESIGN FOR 20° SKEW

DUAL 320'-0 x 30' CONTINUOUS WELDED GIRDER BRIDGES AND WELDED WIRE RETARD

97'-0 End Spans — 125'-0 Interior Span

Concrete floor & substructure — Tubular Handrail

RETARD DETAILS

STATION: 1301+20.00 — Project No FU-1005(10)

IOWA STATE HIGHWAY COMMISSION — STORY COUNTY

Dec. 1962 — SHEET 3 OF 15

DESIGN No 3061 — STORY Co. — FILE No 21508

Bench Mark No ~~23 Sta. 1300+91, 12" spike in E. side 15" Willow, 122' Rt. Elevation = 878.15~~
23 Sta. 1299+80 E.H.C. B.M. on S.W. wing E.B. Bridge Elev. 891.75
24 Sta. 1302+60 E.H.C. B.M. on N.E. wing W.B. Bridge Elev. 891.74

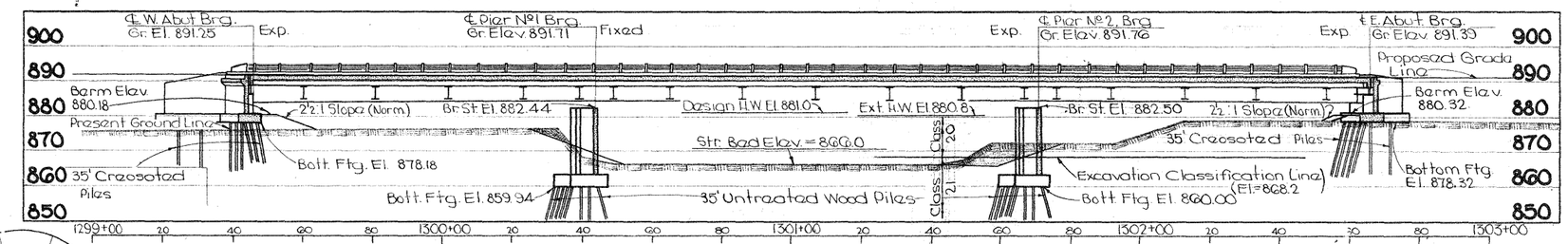

LONGITUDINAL SECTION ALONG ℄ ROADWAY
(WESTBOUND LANE)

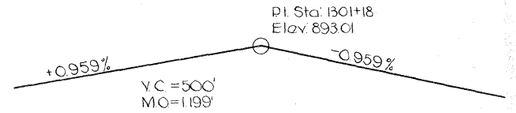

VERTICAL CURVE DATA

LOCATION
Story County
T-83-N R-24-W
Washington Twp.
Section 13
U.S. No 30 over
Skunk River

NORTH

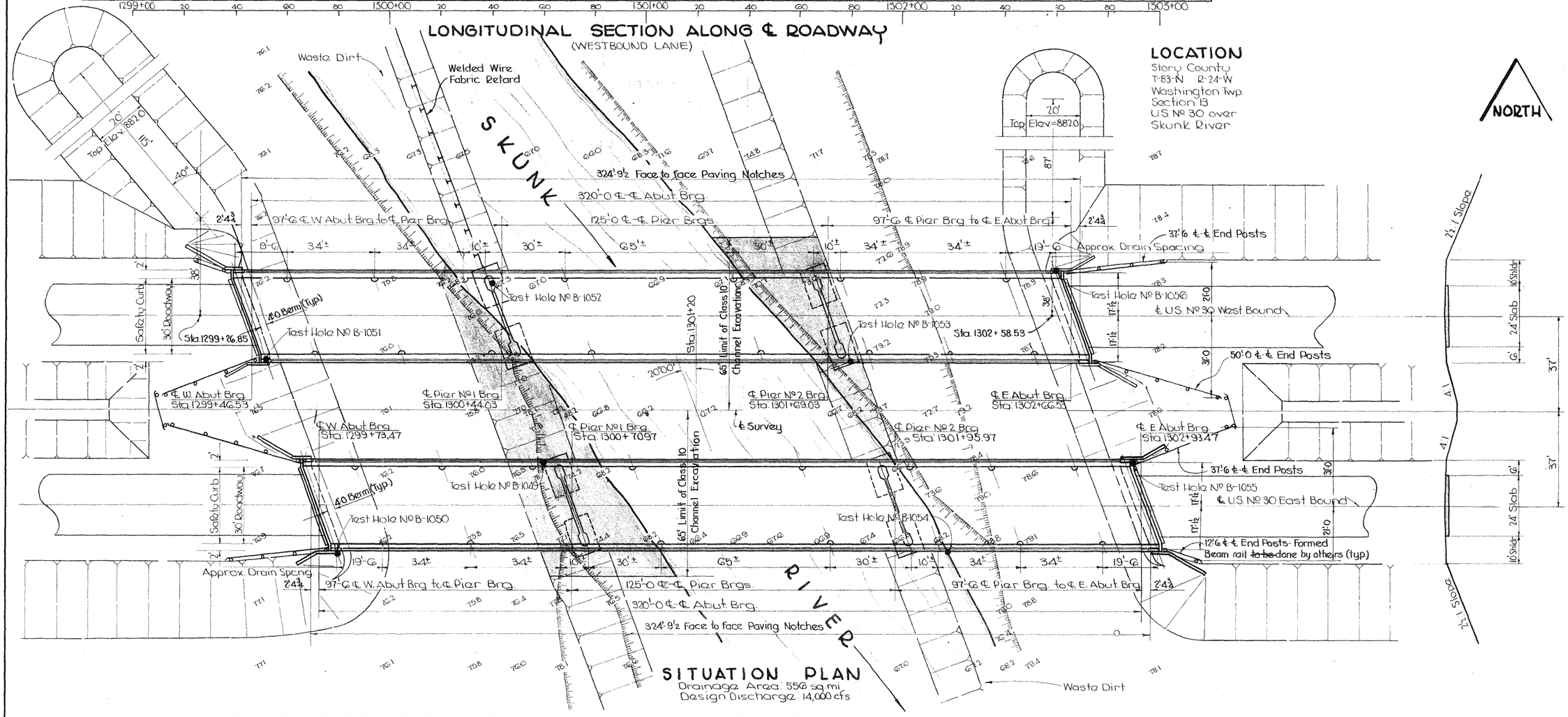

SITUATION PLAN
Drainage Area: 550 sq. mi.
Design Discharge: 14,000 cfs

TYPICAL APPROACH SECTION

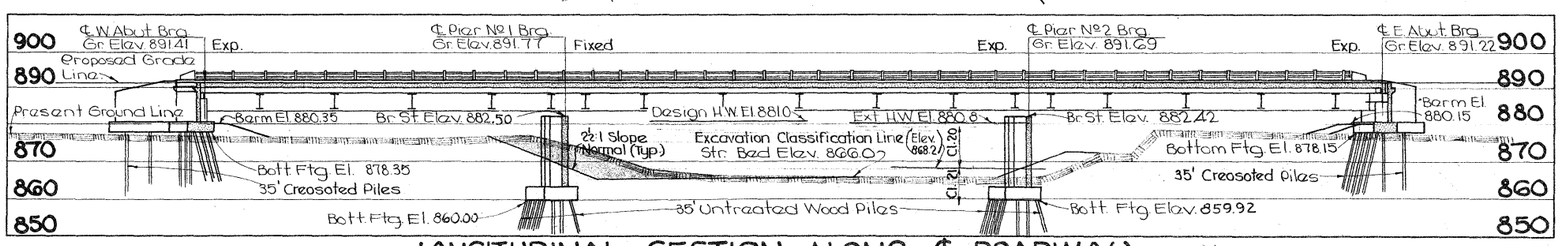

LONGITUDINAL SECTION ALONG ℄ ROADWAY (East BOUND LANE)

Design for 20° Skew

DUAL 320'-0 x 30' CONTINUOUS WELDED GIRDER BRIDGES AND WELDED WIRE RETARD

2 @ 97'-6 END SPANS — 125'-0 INTERIOR SPAN
CONCRETE FLOOR & SUBSTRUCTURE — TUBULAR HAND RAIL

SITUATION PLAN

STATION: 1301+20.00 — Project No FU-1065(10)

STORY COUNTY

IOWA STATE HIGHWAY COMMISSION
DECEMBER 1962 — SHEET 4 OF 15

DESIGN No 3061 — STORY COUNTY — FILE No 21508

TRACED BY: TEFANI — CHECKED BY: JDN

Bench Mark: ~~Nº 23 Sta. 1300+91, 122' Rt. Set R.R. Spk. in E. Side of 15" Willow on W. Side of River El. 878.13~~
Nº 238 Sta. 1299+80 T.H.C. R.M. on E. wing W.B. Bridge El. 891.75
Nº 238 Sta. 1301+38 T.H.C. R.M. on N.E. wing W.B. Bridge El. 891.74

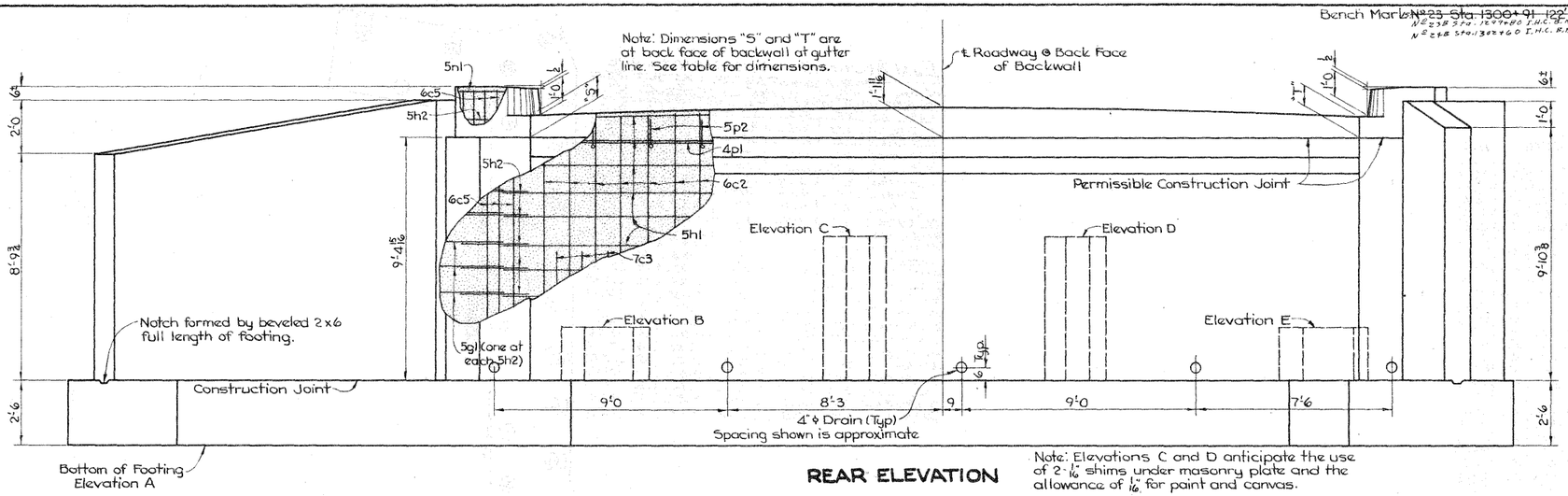

REAR ELEVATION

Note: Elevations C and D anticipate the use of 2-1/16" shims under masonry plate and the allowance of 1/16" for paint and canvas.

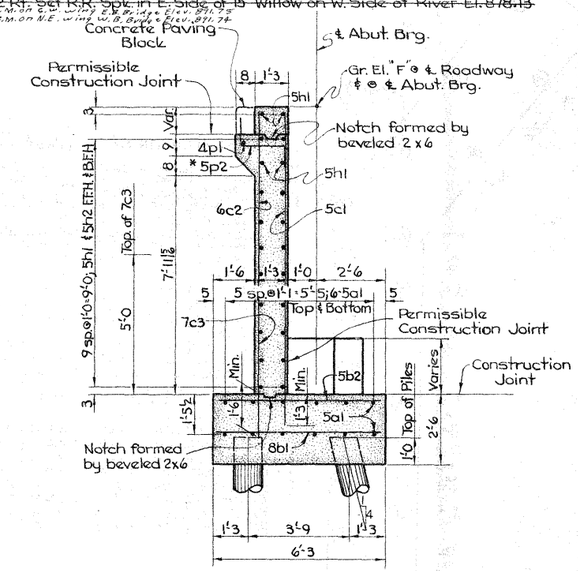

SECTION A-A

Note: Concrete paving block ~~shall be~~ placed after backwall ~~is in~~ place. Bend down 5p2 bars and line notch with tarpaper to prevent bond. Remove paving block and straighten 5p2 bars as shown before paving is placed. * 5p2 bars are to be structural grade steel.

DIMENSION TABLE		
Abutment Location	"S"	"T"
Westbound Lane ~ West Abut.	10	10 5/8
Eastbound Lane ~ West Abut.	10 1/16	10 13/16
Westbound Lane ~ East Abut.	10 1/16	10 13/16
Eastbound Lane ~ East Abut.	10	10 5/8

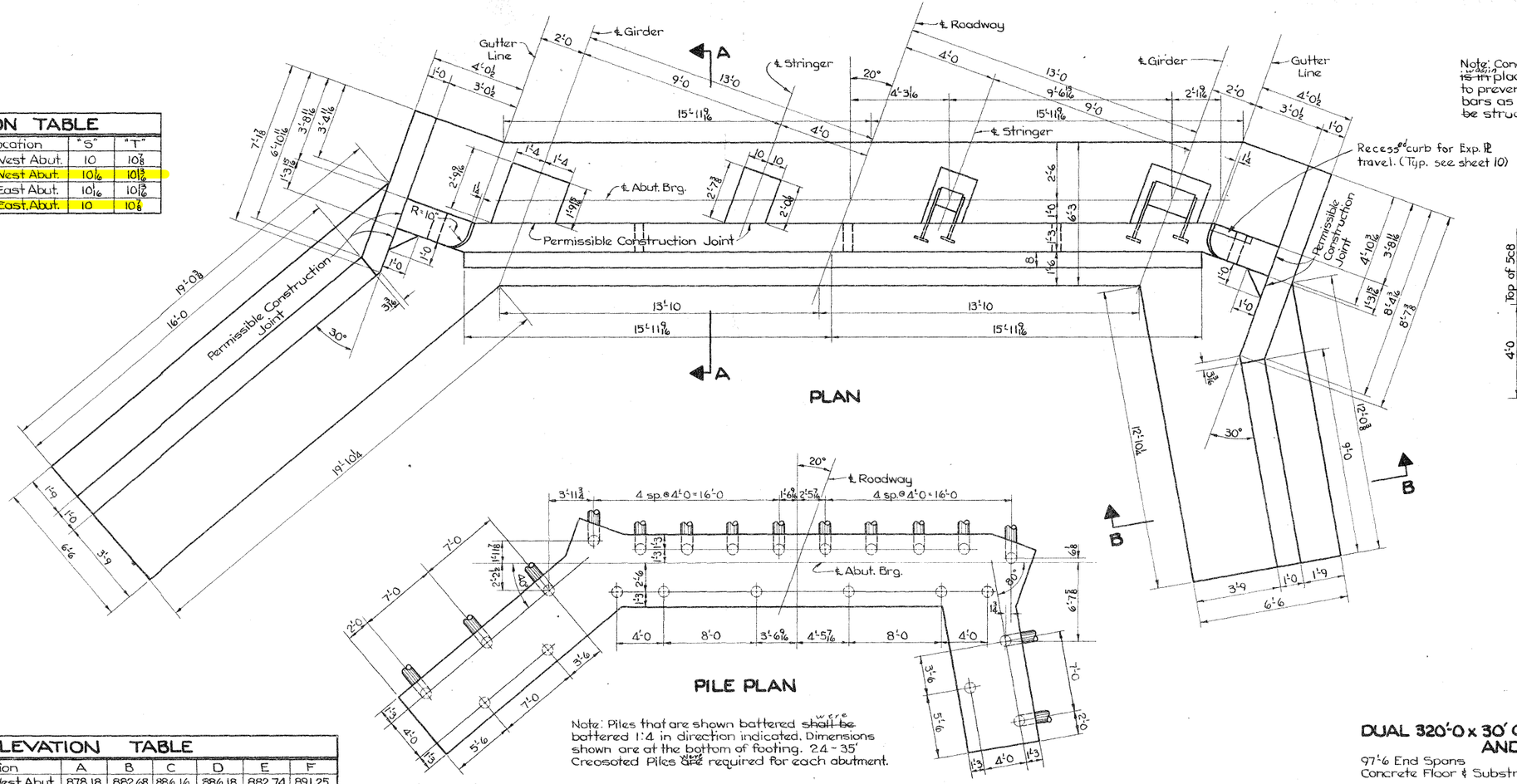

Note: Piles that are shown battered ~~shall be~~ were battered 1:4 in direction indicated. Dimensions shown are at the bottom of footing. 24 - 35' Creosoted Piles ~~are~~ were required for each abutment.

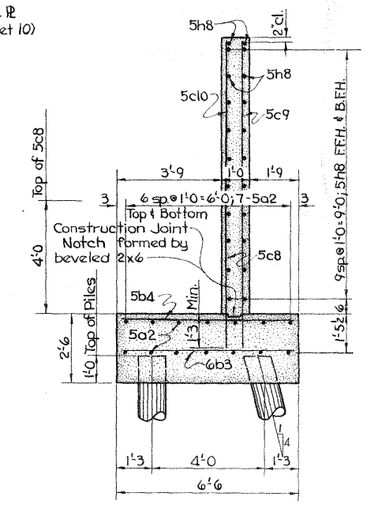

SECTION B-B

ELEVATION TABLE						
Abutment Location	A	B	C	D	E	F
Westbound Lane ~ West Abut.	878.18	882.68	886.16	886.18	882.74	891.25
Eastbound Lane ~ West Abut.	878.35	882.85	886.32	886.34	882.90	891.41
Westbound Lane ~ East Abut.	878.32	882.82	886.30	886.32	882.88	891.39
Eastbound Lane ~ East Abut.	878.15	882.65	886.13	886.15	882.72	891.22

Design for 20° Skew

DUAL 320'-0 x 30' CONTINUOUS WELDED GIRDER BRIDGES AND WELDED WIRE RETARD

97'-6 End Spans — 125'-0 Interior Span
Concrete Floor & Substructure — Tubular Handrail

ABUTMENT DETAILS

Station: 1301 + 20.00

Project Nº FU-1065(10)

STORY COUNTY

Iowa State Highway Commission

December 1962 — Sheet 5 of 15

Design Nº 3061 — Story County — File Nº 21508

Checked by: CEO

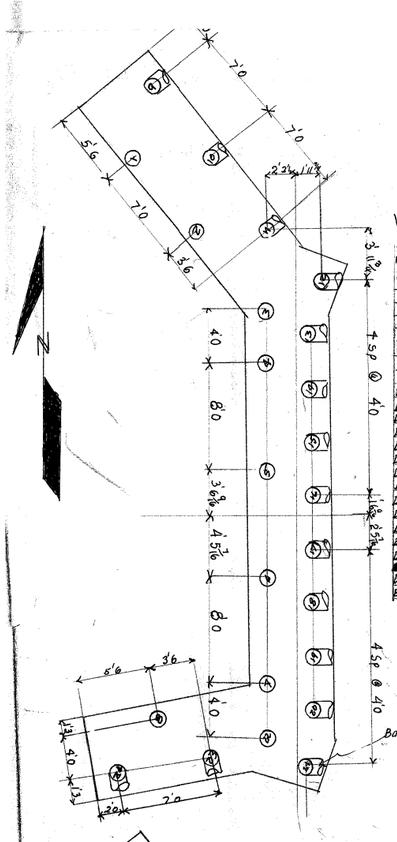

West Abutment West Bound Lane

Pile No.	Date Driven	Length in feet Nearest ft.	Length cut off Nearest 1/4 ft.	Length in Structure	Ave. Pen last 5 blows (inches)	Drop in feet	Bearing in tons
1	9-3-63	35	0.6	34.4	1.15	8	27.1
2	9-3-63	35	1.0	34.0	0.85	8	32.2
3	9-3-63	35	0.7	34.3	0.725	8	31.9
4	9-3-63	35	13.2	21.8	0	6	R
5	9-3-63	35	0.8	34.2	1.025	8	29.5
6	9-3-63	35	1.1	33.9	0.75	8	36.9
7	9-3-63	35	0.7	34.3	0.90	8	32.5
8	8-31-63	35	1.1	33.9	1.00	8	30.1
B9	9-3-63	35	0.8	34.2	1.35	8	23.2
B10	9-3-63	35	0.9	34.1	1.00	8	28.5
B11	9-3-63	35	1.1	33.9	1.00	8	28.5
B12	9-3-63	35	0.8	34.2	0.90	8	30.7
B13	9-3-63	35	1.0	34.0	0.90	8	30.7
B14	8-31-63	35	0.9	34.1	0.95	8	29.5
B15	8-31-63	35	1.1	33.9	0.95	8	28.5
B16	8-31-63	35	1.3	33.7	0.80	8	33.4
B17	8-31-63	35	1.3	33.7	0.65	8	38.4
B18	8-31-63	35	1.2	33.8	0.85	8	32.0
B19	8-31-63	35	1.1	33.9	0.85	8	32.0
B20	8-30-63	35	1.3	33.7	1.05	8	27.4
B21	8-30-63	35	1.3	33.7	1.20	8	24.8
22	8-31-63	35	1.2	33.8	0.80	8	35.3
B23	8-30-63	35	1.2	33.8	0.80	8	35.3
B24	8-30-63	35	1.2	33.8	0.85	8	29.5

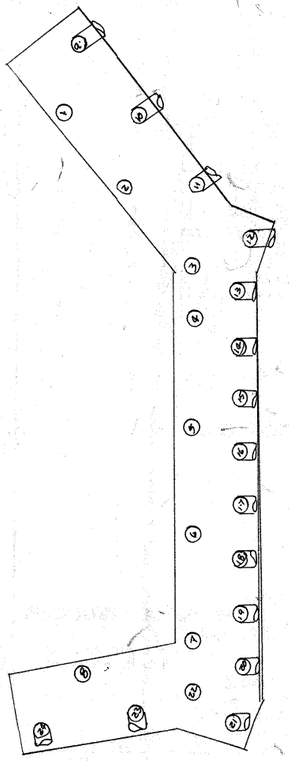

West Abutment East Bound Lane

Pile No.	Date Driven	Length in feet Nearest ft.	Length cut off Nearest 1/4 ft.	Length in Structure	Ave. Pen last 5 blows (inches)	Drop in feet	Bearing in tons
1	8-29-63	35	1.4	33.6	0.90	8	32.5
2	8-29-63	35	1.3	33.7	1.00	8	30.1
3	8-29-63	35	1.3	33.7	0.75	8	36.9
4	8-28-63	35	2.0	33.0	1.05	8	28.0
5	8-28-63	35	1.9	33.1	0.95	8	31.2
6	8-28-63	35	1.3	33.7	1.20	10	32.8
7	8-29-63	35	0.6	34.4	0.70	8	38.7
8	8-29-63	35	13.0	22.0	R	10	—
B9	8-29-63	35	1.3	33.7	0.85	8	32.0
B10	8-29-63	35	1.9	33.1	0.75	8	42.7
B11	8-29-63	35	3.1	31.9	0.70	8	36.6
B12	8-28-63	35	1.4	33.6	0.70	8	36.6
B13	8-28-63	35	1.5	33.5	0.75	8	34.9
B14	8-28-63	35	1.5	33.5	0.55	8	42.7
B15	8-28-63	35	1.5	33.5	0.65	8	38.4
B16	8-29-63	35	1.1	33.9	0.80	8	33.4
B17	8-30-63	35	1.1	33.9	0.95	8	29.5
B18	8-28-63	35	1.4	33.6	0.65	8	38.4
B19	8-28-63	35	1.3	33.7	0.60	8	40.5
B20	8-29-63	35	1.1	33.9	0.75	8	34.9
B21	8-29-63	35	1.2	33.8	1.20	8	24.8
22	8-29-63	35	0.8	34.2	0.85	8	33.9
B23	8-29-63	35	1.2	33.8	0.70	8	36.6
B24	8-29-63	35	1.2	33.8	0.80	8	33.4

35 ft. Piles Creosote
Type hammer - Gravity
Gross Weight - 5090
weight of pile - ~~1380~~ 1050
I. H. C. hammer No. 289
Effective weight - 5080
T.H.C. cap No. - 168
Weight of cap - 1050

Formula used - $P = \frac{2wH}{0.35+S} \times \frac{w_p}{w+w_d}$ Vert.

$P = \frac{(2)(2.54)(8)}{0.35+S} \times \frac{5080}{\cancel{7630}\ 7560}$

$P = \frac{60.96}{5+0.35} \times 0.6\cancel{7}6$

$P = \frac{\cancel{60.60}\ 60.60}{\cancel{5+0.34}\ 5+0.35}$ Vert.

(") 0.996 Batt. 1:4

East Abutment West Bound Lane

Pile No.	Date Driven	Length in feet Nearest ft.	Length cut off Nearest 1/4 ft.	Length in Structure	Ave. Pen last 5 blows (inches)	Drop in feet	Bearing in tons
1	9-17-63	35	0.7	34.3	0.95	8	31.2
2	9-17-63	35	0.8	34.2	0.85	8	32.2
3	9-17-63	35	1.1	33.9	0.70	8	38.7
4	9-17-63	35	0.3	34.7	0.65	8	40.6
5	9-17-63	35	0.7	34.3	0.70	8	38.7
6	9-17-63	35	3.0	32.0	0.50	8	48.8
7	9-18-63	35	0.3	34.7	1.10	8	28.0
8	9-18-63	35	0.8	34.2	1.00	8	30.1
B9	9-17-63	35	0.9	34.1	1.00	8	28.5
B10	9-17-63	35	0.9	34.1	0.65	8	38.4
B11	9-17-63	35	0.7	34.3	1.20	8	24.8
B12	9-17-63	35	0.8	34.2	0.95	8	29.5
B13	9-17-63	35	0.7	34.3	1.10	8	26.5
B14	9-17-63	35	0.5	34.5	1.00	8	28.5
B15	9-17-63	35	1.3	33.7	0.65	8	38.4
B16	9-17-63	35	0.7	34.3	0.90	8	30.7
B17	9-17-63	35	0.5	34.5	0.90	8	30.7
B18	9-18-63	35	0.6	34.4	0.95	8	29.5
B19	9-18-63	35	0.6	34.4	1.00	8	28.5
B20	9-18-63	35	1.0	34.0	0.75	8	34.9
B21	9-18-63	35	0.9	34.1	0.80	8	33.4
22	9-18-63	35	0.8	34.2	1.15	8	27.1
B23	9-18-63	35	0.9	34.1	0.80	8	33.4
B24	9-18-63	35	0.8	34.2	0.95	8	29.5

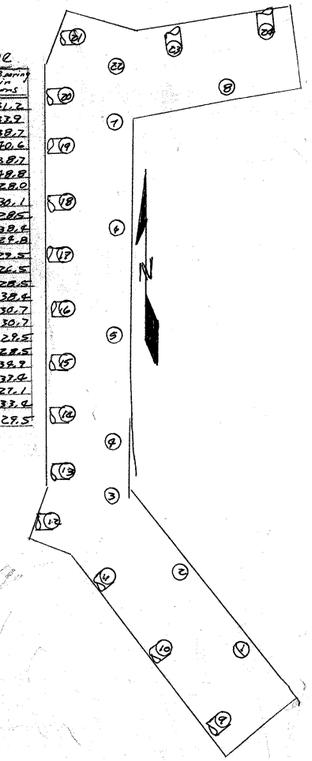

East Abutment East Bound Lane

Pile No.	Date Driven	Length in feet Nearest ft.	Length cut off Nearest 1/4 ft.	Length in Structure	Ave. Pen last 5 blows (inches)	Drop in feet	Bearing in tons
1	9-16-63	35	0.6	34.4	0.60	8	48.8
2	9-16-63	35	0.9	34.1	0.95	8	31.2
3	9-16-63	35	0.8	34.2	1.10	8	28.0
4	9-16-63	35	0.8	34.2	0.65	8	40.6
5	9-16-63	35	0.8	34.2	0.70	8	38.7
6	9-16-63	35	0.9	34.1	0.50	8	48.8
7	9-17-63	35	0.7	34.3	0.75	8	36.9
8	9-17-63	35	1.0	34.0	~~5~~ 0.50	8	48.8
B9	9-16-63	35	0.9	34.1	0.90	8	30.7
B10	9-16-63	35	1.1	33.9	0.60	8	40.5
B11	9-16-63	35	1.0	34.0	0.70	8	36.6
B12	9-16-63	35	1.3	33.7	0.60	8	40.5
B13	9-16-63	35	1.1	33.9	0.45	8	48.0
B14	9-16-63	35	1.0	34.0	0.80	8	33.4
B15	9-16-63	35	0.9	34.1	0.75	8	34.9
B16	9-16-63	35	0.9	34.1	0.70	8	36.6
B17	9-16-63	35	0.9	34.1	0.75	8	34.9
B18	9-16-63	35	0.9	34.1	0.60	8	40.5
B19	9-16-63	35	0.8	34.2	0.40	8	51.2
B20	9-17-63	35	0.5	34.5	0.95	8	29.5
B21	9-17-63	35	0.9	34.1	1.00	8	28.5
22	9-17-63	35	0.7	34.3	0.90	8	30.7
B23	9-17-63	35	1.1	33.9	0.55	8	42.7
B24	9-17-63	35	1.3	33.7	0.55	8	42.7

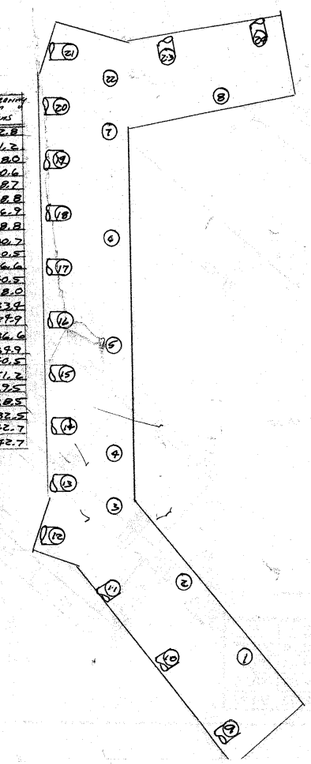

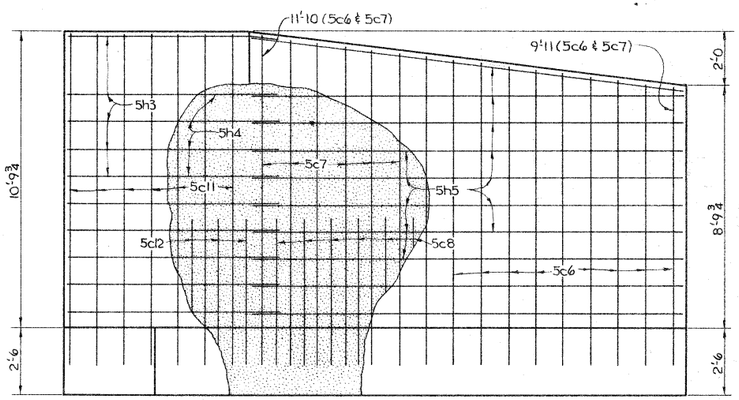

VIEW D-D

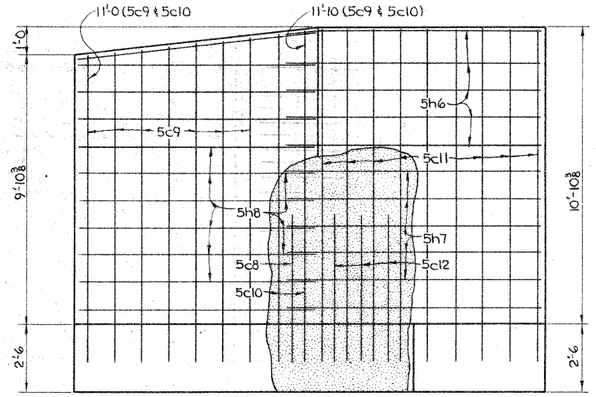

VIEW E-E

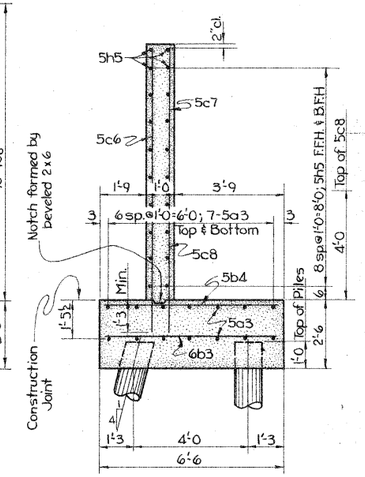

SECTION C-C

PART VIEW F-F

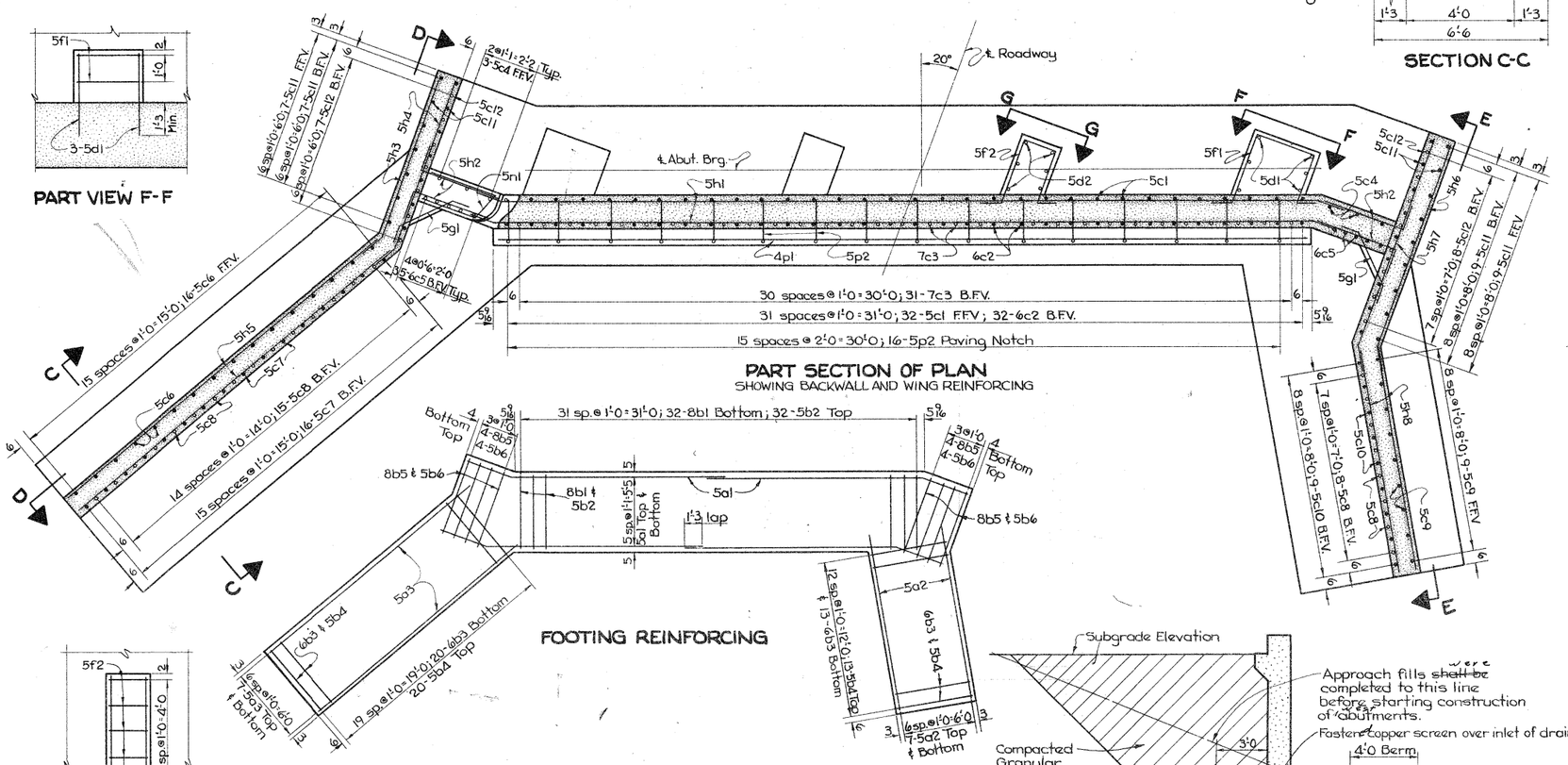

PART SECTION OF PLAN
SHOWING BACKWALL AND WING REINFORCING

FOOTING REINFORCING

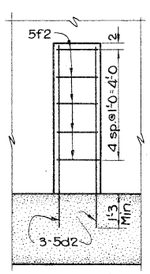

PART VIEW G-G

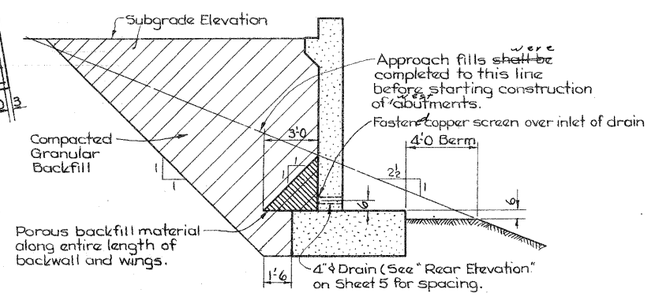

SECTION SHOWING SPECIAL BACKFILL

Note: Excavation outside of the limits shown shall also be backfilled with granular backfill but at the Contractor's expense.

ABUTMENT NOTES:

All exposed corners of 90° or sharper ~~are to be~~ were filleted with a ¾" dressed and beveled strip.

Minimum clear distance from face of concrete to near reinforcing bar is ~~to be~~ 2" unless otherwise noted or shown.

The Bridge Contractor ~~is to~~ backfilled abutments between wings to subgrade elevation with granular backfill complying with Section 4133 of the Standard Specifications.

Piling shall be driven to full penetration, if practicable, but to not less than 20 ton nor more than 40 ton bearing value.

The porous backfill material ~~to be~~ used along the backwall and wings shall complied with Section 4131 of the Standard Specifications.

REINFORCING STEEL ~ ONE ABUTMENT

Bar	Location	Shape	Nº	Length	Weight
5a1	Footing, Top & Bottom, Longitudinal		24	20'-5	511
5a2	Wing Footing, Top & Bottom, Longitudinal		14	13'-8	199
5a3	Wing Footing, Top & Bottom, Longitudinal		14	20'-8	302
8b1	Footing, Bottom, Transverse		32	5'-11	505
5b2	Footing, Top, Transverse		32	5'-11	197
6b3	Wing Footing, Bottom, Transverse		33	6'-2	306
5b4	Wing Footing, Top, Transverse		33	6'-2	212
8b5	Footing, Bottom, Transverse		8	6'-3	133
5b6	Footing, Top, Transverse		8	6'-3	52
5c1	Backwall, F.F.V.		32	11'-8	389
6c2	Backwall, B.F.V.		32	11'-11	573
7c3	Backwall, B.F.V.		31	6'-6	412
5c4	Backwall, F.F.V.		6	12'-4	77
6c5	Backwall, B.F.V.		10	12'-7	189
5c6	Long Wing, F.F.V.		16	Varies	181
5c7	Long Wing, B.F.V.		16	Varies	181
5c8	Both Wings, B.F.V.		23	5'-3	126
5c9	Short Wing, F.F.V.		9	Varies	107
5c10	Short Wing, B.F.V.		9	Varies	107
5c11	Both Wings, F.F.V. & B.F.V.		32	11'-11	398
5c12	Both Wings, B.F.V.		15	5'-3	82
5d1	Step, Girder Bearing, Vertical		12	3'-2	40
5d2	Step, Floor Beam Bearing, Vertical		12	6'-7	82
5f1	Step, Girder Bearing, Horizontal		4	8'-6	35
5f2	Step, Floor Beam Bearing, Horizontal		10	7'-7	79
5g1	Backwall & Wing Fillet		20	3'-5	71
5h1	Backwall, F.F.H. & B.F.H.		22	34'-5	790
5h2	Backwall, F.F.H. & B.F.H.		44	4'-2	191
5h3	Long Wing, F.F.H.		10	8'-0	83
5h4	Long Wing, B.F.H.		10	8'-4	87
5h5	Long Wing, B.F.H. & F.F.H.		20	15'-9	329
5h6	Short Wing, F.F.H.		11	9'-6	109
5h7	Short Wing, B.F.H.		11	9'-10	113
5h8	Short Wing, B.F.H. & F.F.H.		22	8'-9	201
5n1	Backwall, Curb, Horizontal		2	6'-1	13
4p1	Backwall, Paving Notch, Horizontal		1	31'-7	21
5p2	Backwall, Paving Notch, Vertical		16	3'-3	54
	Total				7537 lbs.

BENT BAR DETAILS

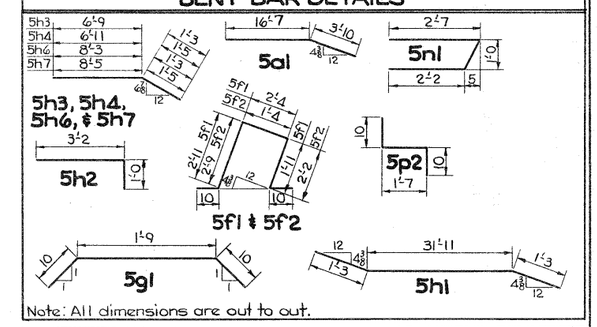

Note: All dimensions are out to out.

CONCRETE PLACEMENT QUANTITIES ~ ONE ABUT.

Footing	40.5
Wings	15.6
Bearing Seats & Backwall below Construction Joint	20.4
Backwall above Construction Joint	2.1
Paving Block	0.8
Total	79.4 c.y.

ESTIMATED QUANTITIES ~ 4 ABUTMENTS

Item	Quantity
Concrete	317.6 c.y.
Reinforcing Steel	30,148 lbs.
Creosoted Piling 96 @ 35'	3360 l.f.
Class 20 Excavation	748 c.y.
Granular Backfill	897 tons
Porous Backfill	46 c.y.

Design for 20° Skew

DUAL 320'-0 x 30' CONTINUOUS WELDED GIRDER BRIDGES AND WELDED WIRE RETARD

97'-6 End Spans
Concrete Floor & Substructure

125'-0 Interior Span
Tubular Handrail

ABUTMENT DETAILS

Station: 1301 + 20.00

Project Nº FU-1065(10)

STORY COUNTY

Iowa State Highway Commission

December 1962

Sheet 6 of 15

Design Nº 3061 | Story County | File Nº 21508

Bench Mark №23: Sta. 1300+91, 122' Rt. Set RR Spk. in E. Side of 15" Willow on W. Side of River. El. 878.13
N = 228 Sta. 1298+80 L.N.C. Bm. on S. wing wall of bridge
N = 228 Sta. 1302+60 L.N.C. Bm. on N.E. wing wall of bridge
El. 891.74
El. 891.74

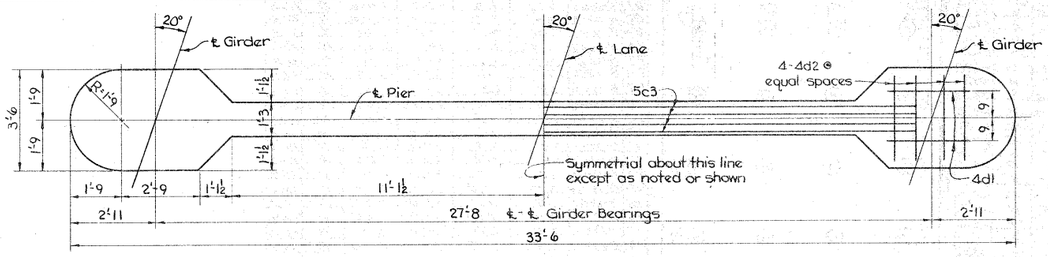

TOP VIEW

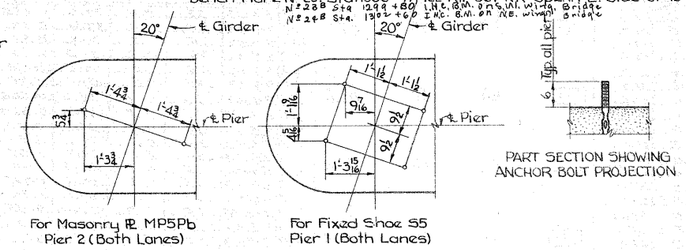

ANCHOR BOLT SETTING DETAILS

*Grade to Pier Top (Includes 1/16" for paint & canvas)
E. Bound Lane - Pier 1: 9'-3¼ ; Pier 2: 9'-3¼
W. Bound Lane - Pier 1: 9'-3¼ ; Pier 2: 9'-3⅛

*Grade to Pier Top
℄ Grade El. @ ℄ Pier | E. Bound Lane: Pier 1: 891.77 ; Pier 2: 891.69
W. Bound Lane: Pier 1: 891.71 ; Pier 2: 891.76
Top of Pier El. | E. Bound Lane: Pier 1: 882.50; Pier 2: 882.42
W. Bound Lane: Pier 1: 882.44 ; Pier 2: 882.50

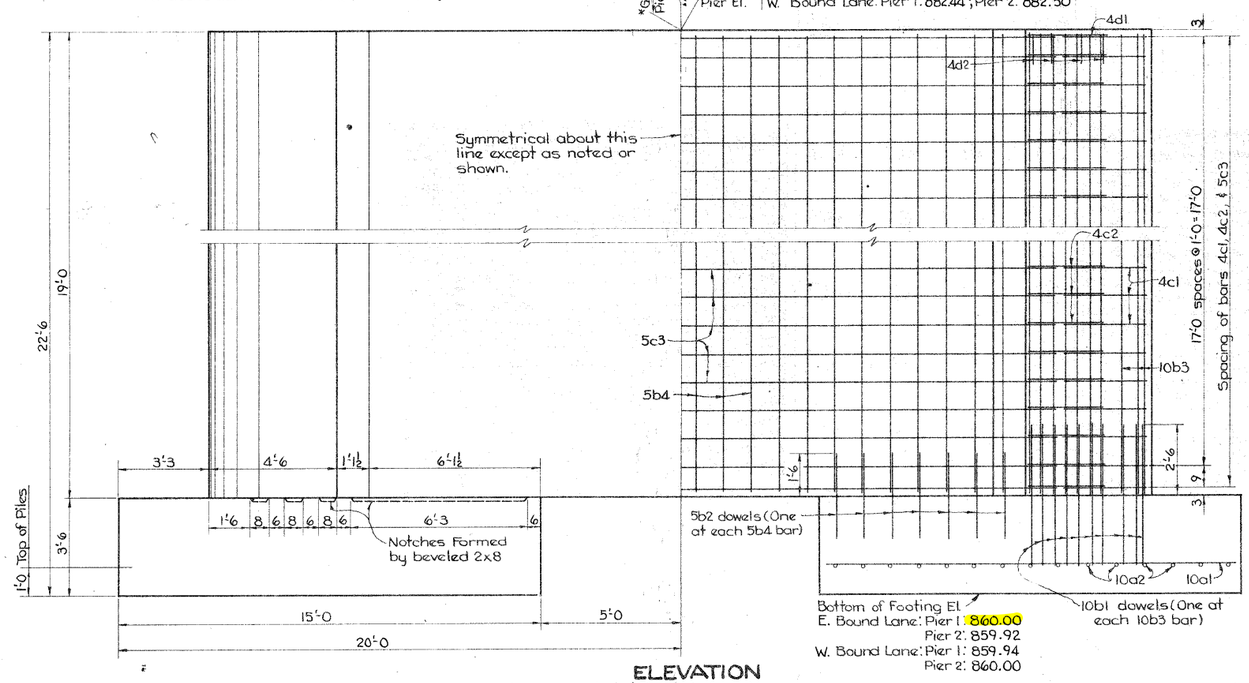

ELEVATION
(Piles not shown)

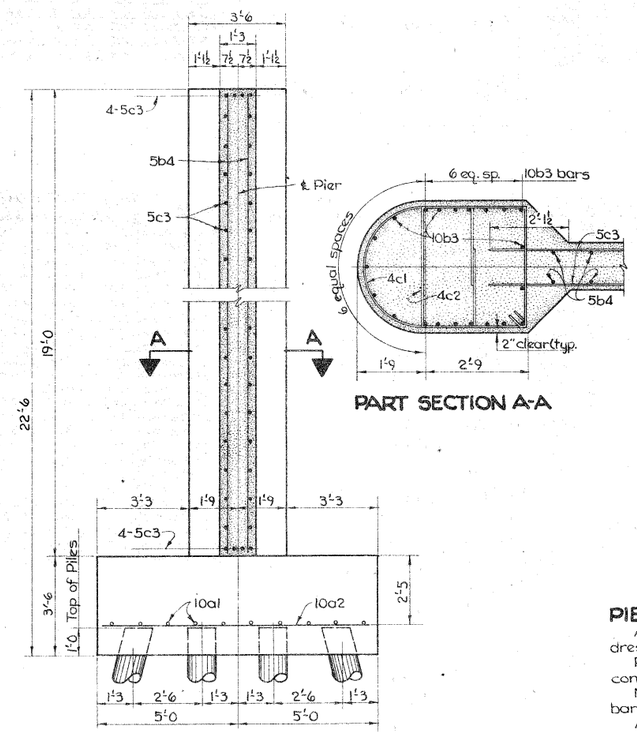

℄ SECTION

PART SECTION A-A

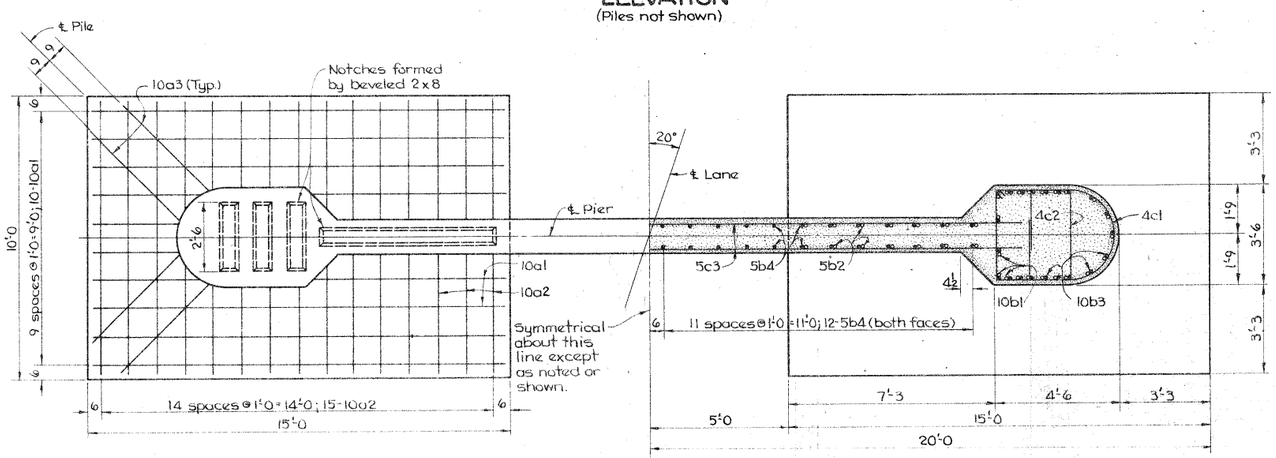

HALF PLAN
Showing Footing Reinforcing Layout

HALF SECTION

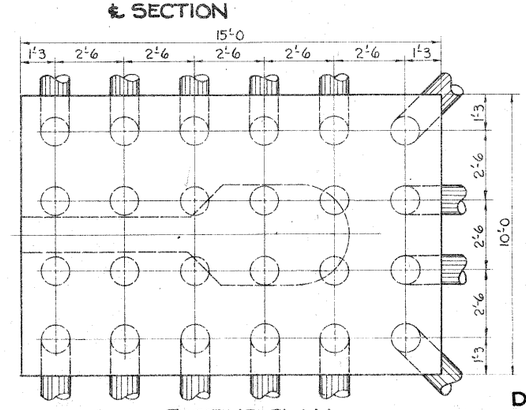

FOOTING PLAN
Showing Piling Layout
(Typical for all footings)

Note: Battered piles ~~shall be~~ were battered 1:4 in direction indicated. Pile spacing is at bottom of footing.
48 - 35' Untreated Wood Piles ~~are~~ were required for each pier.

REINFORCING STEEL ~ ONE PIER

Bar	Location	Shape	№	Length	Weight
10a1	Footing, Longitudinal	——	20	14'-8	1262
10a2	Footing, Transverse	——	30	9'-8	1248
10a3	Footing, Outside Corners	——	8	6'-6	224
10b1	Column Dowels	——	42	5'-0	904
5b2	Diaphragm Dowels	——	28	3'-0	88
10b3	Column, Vertical	——	42	18'-9	3389
5b4	Diaphragm, Vertical	——	48	18'-8	935
4c1	Column Hoops	D	40	11'-7	309
4c2	Column Hoops	⊡	40	12'-6	334
5c3	Diaphragm, Horizontal	——	44	26'-6	1216
4d1	Column, Top, Longitudinal	——	4	3'-0	8
4d2	Column, Top, Transverse	⊓	8	4'-8	25
	Total				9942 lbs.

BENT BAR DETAILS

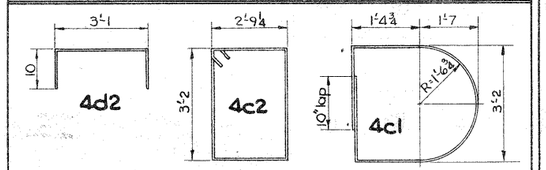

Note: All dimensions are out to out. Radii are to ℄ bar

CONCRETE PLACEMENT QUANTITIES ~ ONE PIER

Footings	2 @ 18.7	37.4	✓
Column		43.6	✓
	Total	81.0	c.y. ✓

ESTIMATED QUANTITIES ~ FOUR PIERS

Item	Quantity	
Concrete	324.0	c.y. ✓
Reinforcing Steel	39,768	lbs. ✓
Untreated Wood Piling (Oak or Gumwood) 192 @ 35'	6720	l.f. ✓
Class 20 Excavation	140	c.y. ✓
Class 21 Excavation	520	c.y. ✓

PIER NOTES:

All exposed corners of 90° or sharper ~~are to be~~ were filleted with a ¾" dressed and beveled strip.

Reinforcing steel ~~shall be~~ was securely wired in place before concrete ~~is~~ was placed.

Minimum clear distance from face of concrete to near reinforcing bar is ~~to be~~ 2" unless otherwise noted or shown.

Anchor bolts ~~shall be~~ were set during placing of concrete in accordance with Section 2405.09 of the Standard Specifications. Weight of anchor bolts ~~is~~ was included in superstructure "Structural Steel" estimate.

Piling ~~shall be~~ was 35' untreated oak or gum wood. Required piling length ~~is~~ was determined by desired penetration of piling. Piling ~~shall be~~ was driven ~~and jetted~~ as close as practicable to desired penetration, but to at least 20 tons bearing value.

A test-load pile ~~shall be~~ was driven at Pier 1, East Bound Lane. See General Plan, sheet 2, for details.

Design for 20° Skew

DUAL 320'-0 x 30' CONTINUOUS WELDED GIRDER BRIDGES AND WELDED WIRE RETARD

97'-6 End Spans
Concrete Floor & Substructure

125'-0 Interior Span
Tubular Handrail

PIER DETAILS

Station: 1301 + 20.00

Project № FU-10G5(10)

STORY COUNTY

Iowa State Highway Commission

December 1962

Sheet 7 of 15

Design № 3061 Story County

File № 21503

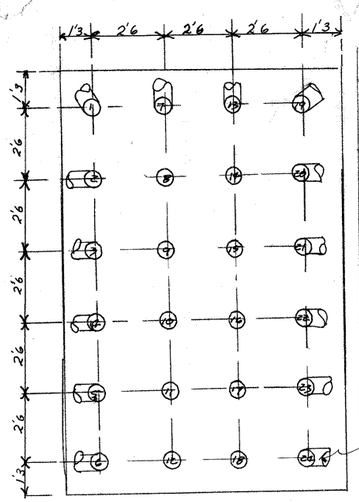

Pier No 1 West Bound Lane

Pile No.	Date Driven	Length in Leads nearest ft	Length cut off nearest .1 ft	Length in Structure	Ave. Pen. last 5 blows (inches)	Drop in feet	Bearing in tons
B1	8-16-63	35	1.0	34.0	1.35	8	22.9
B2	8-16-63	35	2.1	32.9	0.80	8	33.9
B3	8-16-63	35	2.2	32.8	1.30	8	23.5
B4	8-16-63	35	1.4	33.6	1.30	8	23.5
B5	8-16-63	35	1.1	33.9	1.05	8	27.8
B6	8-16-63	35	0.9	34.1	1.00	8	28.8
B7	8-16-63	35	1.8	33.2	1.05	8	27.8
B8	8-16-63	35	1.1	33.9	0.95	8	31.7
9	8-16-63	35	1.7	33.3	1.10	8	28.4
10	8-16-63	35	1.6	33.4	0.75	8	32.4
11	8-16-63	35	1.7	33.3	0.80	8	35.8
12	8-16-63	35	2.3	32.7	0.85	8	32.4
B13	8-16-63	35	1.0	34.0	0.85	8	32.4
14	8-16-63	35	1.3	33.7	0.75	8	37.4
15	8-16-63	35	1.4	33.6	0.70	8	39.2
16	8-16-63	35	1.2	33.8	1.10	8	28.0
17	8-16-63	35	1.6	33.4	0.80	8	35.8
18	8-16-63	35	1.2	33.8	0.85	8	34.3
B19	8-14-63	35	1.7	33.3	1.10	8	26.9
B20	8-15-63	35	2.3	32.7	0.95	8	30.0
B21	8-14-63	35	1.5	33.5	1.00	8	28.8
B22	8-15-63	35	1.9	33.1	0.90	8	31.2
B23	8-14-63	35	1.3	33.7	1.05	8	27.8
B24	8-15-63	35	2.1	32.9	0.55	8	43.3

battered 1:4

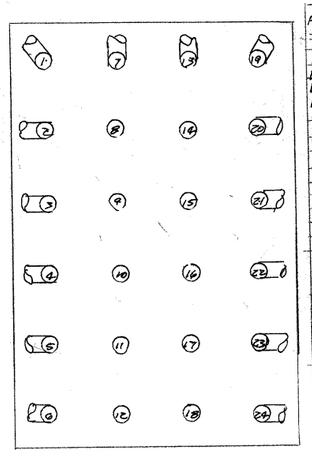

Pier No 2 West Bound Lane

Pile No	Date Driven	Length in Leads nearest ft	Length cut off nearest .1 ft	Length in Structure	Ave. Pen. last 5 blows (inches)	Drop in feet	Bearing in tons
B1	9-6-63	35	0.8	34.2	0.65	8	40.0
B2	9-6-63	35	1.2	33.8	0.60	8	41.0
B3	9-9-63	35	0.7	34.3	0.90	8	31.2
B4	9-9-63	35	0.7	34.3	0.85	8	32.4
B5	9-9-63	35	1.0	34.0	0.50	8	45.9
B6	9-9-63	35	0.9	34.1	0.80	8	31.9
B7	9-6-63	35	0.7	34.3	0.825	8	33.1
8	9-6-63	35	0.8	34.2	0.625	8	42.3
9	9-9-63	35	0.9	34.1	0.80	8	35.8
10	9-9-63	35	0.9	34.1	1.00	8	30.5
11	9-9-63	35	0.8	34.2	1.05	8	29.4
12	9-10-63	35	0.7	34.3	1.30	8	25.9
B13	9-6-63	35	0.9	34.1	0.975	8	27.4
14	9-9-63	35	0.9	34.1	0.70	8	37.2
15	9-9-63	35	1.0	34.0	0.85	8	32.3
16	9-9-63	35	0.9	34.1	0.80	8	35.8
17	9-9-63	35	4.7	30.3	R	8	—
18	9-10-63	35	0.6	34.4	0.70	8	37.2
B19	9-6-63	35	1.3	33.7	0.625	8	38.0
B20	9-9-63	35	0.9	34.1	0.80	8	33.9
B21	9-6-63	35	0.9	34.1	0.85	8	32.4
B22	9-9-63	35	0.5	34.5	1.00	8	28.8
B23	9-9-63	35	1.4	33.6	0.80	8	33.9
B24	9-10-63	35	1.0	34.0	0.60	8	41.0

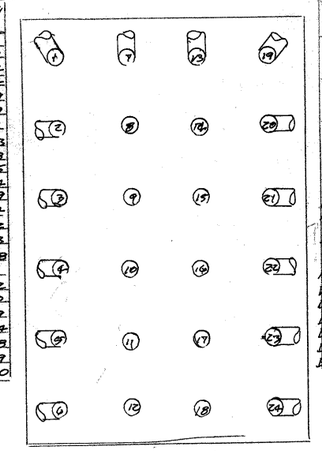

Pier No 1 East Bound Lane

Pile No.	Date Driven.	Length in Leads nearest ft	Length cut off nearest .1 ft	Length in Structure	Ave. Pen. last 5 blows (inches)	Drop in feet	Bearing in tons
B1	8-12-63	35	1.7	33.3	1.075	8	27.3
B2	8-12-63	35	2.2	32.8	0.975	8	27.4
B3	8-12-63	35	0.9	34.1	0.90	8	31.2
B4	8-12-63	35	1.0	34.0	0.85	8	32.4
B5	8-12-63	35	1.1	33.9	1.10	8	26.9
B6	8-13-63	35	1.2	33.8	0.60	8	41.0
B7	8-13-63	35	1.4	33.6	1.35	8	22.9
8	8-13-63	35	2.0	33.0	0.80	8	35.8
9	8-13-63	35	1.0	34.0	0.675	8	40.2
10	8-13-63	35	1.6	33.4	1.05	8	29.4
11	8-13-63	35	0.8	34.2	1.025	8	29.9
12	8-13-63	35	1.7	33.3	1.05	8	27.4
B13	8-13-63	35	1.5	33.5	1.10	8	26.9
B14	8-13-63	35	2.8	32.2	0.70	8	37.2
15	8-13-63	35	1.2	33.8	0.95	8	31.7
16	8-13-63	35	23.1	11.9	1.45	8	22.9
17	8-13-63	35	1.0	34.0	0.90	8	33.0
B18	8-13-63	35	2.8	32.2	0.80	8	35.8
B19	8-12-63	35	1.1	33.9	1.10	8	26.9
B20	8-12-63	35	1.4	33.6	0.875	8	31.6
B21	8-12-63	35	0.9	34.1	0.875	8	31.6
B22	8-12-63	35	1.8	33.2	0.85	8	32.4
B23	8-12-63	35	0.7	34.3	1.075	8	37.3
B24	8-12-63	35	1.6	33.4	0.70	8	37.1

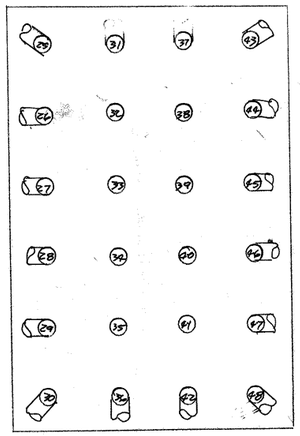

Pile No.	Date Driven	Length in Leads nearest ft	Length cut off nearest .1 ft	Length in Structure	Ave. Pen. last 5 blows	Drop in feet	Bearing in tons
B25	8-9-63	35	1.0	34.0	0.80	8	33.9
B26	8-19-63	35	0.1	34.9	0.875	8	31.6
B27	8-19-63	35	1.6	33.4	0.85	8	32.4
B28	8-19-63	35	0.3	34.7	1.10	8	26.9
B29	8-19-63	35	1.4	33.6	1.25	8	22.9
B30	8-19-63	35	0.4	34.6	0.85	8	32.4
B31	8-19-63	35	1.4	33.6	1.20	8	26.6
32	8-19-63	35	1.6	33.4	0.80	8	35.8
33	8-20-63	35	1.5	33.5	1.20	8	26.6
34	8-20-63	35	1.8	33.2	0.85	8	32.3
35	8-20-63	35	1.7	33.3	1.10	8	28.4
B36	8-19-63	35	1.8	33.2	1.25	8	23.0
37	8-19-63	35	1.9	33.1	0.75	8	37.4
38	8-19-63	35	1.7	33.3	1.10	8	28.4
39	8-20-63	35	1.6	33.4	0.95	8	31.7
40	8-20-63	35	2.1	32.9	0.625	8	53.2
41	8-20-63	35	1.4	33.6	0.95	8	31.7
B42	8-18-63	35	1.4	33.6	0.95	8	30.0
B43	8-18-63	35	1.7	33.3	1.10	8	26.5
B44	8-18-63	35	1.0	34.0	1.80	8	22.2
B45	8-18-63	35	1.4	33.6	0.90	8	31.2
B46	8-18-63	35	0.6	34.4	1.05	8	27.8
B47	8-19-63	35	1.0	34.0	0.95	8	30.0
B48	8-19-63	35	0.3	34.7	1.20	8	25.2

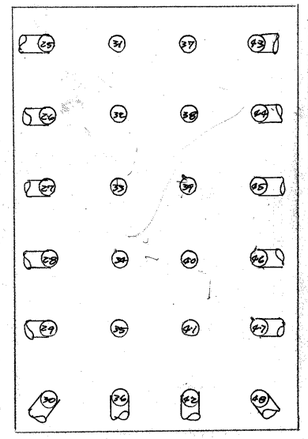

Pile No.	Date Driven	Length in Leads nearest ft	Length cut off nearest .1 ft	Length in Structure	Ave. Pen. last 5 blows	Drop in feet	Bearing in tons
B25	9-10-63	35	0.6	34.4	0.60	8	41.0
B26	9-10-63	35	0.6	34.4	0.50	8	45.9
B27	9-10-63	35	1.1	33.9	0.90	8	31.2
B28	9-10-63	35	1.0	34.0	0.85	8	30.0
B29	9-10-63	35	0.6	34.4	1.15	8	26.0
B30	9-10-63	35	1.3	33.7	1.15	8	26.0
B31	9-10-63	35	0.4	34.6	0.70	8	37.1
32	9-10-63	35	0.7	34.3	1.10	8	28.4
33	9-10-63	35	1.0	34.0	0.80	8	35.8
34	9-10-63	35	0.8	34.2	0.70	8	37.2
35	9-10-63	35	0.7	34.3	0.90	8	33.0
B36	9-11-63	35	0.4	34.6	1.00	8	28.8
37	9-10-63	35	0.7	34.3	0.65	8	41.2
38	9-10-63	35	0.6	34.4	0.60	8	42.4
39	9-10-63	35	0.8	34.2	0.65	8	41.2
40	9-10-63	35	0.7	34.3	1.00	8	30.5
41	9-10-63	35	1.0	34.0	0.95	8	31.7
B42	9-11-63	35	1.0	34.0	0.60	8	41.0
B43	9-10-63	35	0.7	34.3	0.80	8	33.9
B44	9-10-63	35	1.1	33.9	1.00	8	28.8
B45	9-10-63	35	1.0	34.0	1.10	8	26.9
B46	9-10-63	35	0.8	34.2	0.65	8	39.0
B47	9-10-63	35	0.7	34.3	1.10	8	26.9
B48	9-11-63	35	1.0	34.0	1.15	8	26.0

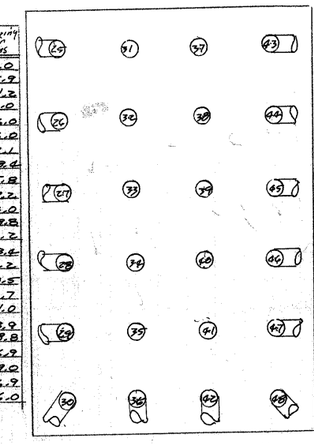

Pile No.	Date Driven	Length in Leads nearest ft	Length cut off nearest .1 ft	Length in Structure	Ave. Pen. last 5 blows (inches)	Drop in feet	Bearing in tons
B25	8-9-63	35	1.5	33.5	0.85	8	32.4
B26	8-9-63	35	1.5	33.5	0.675	8	39.0
B27	8-9-63	35	1.2	33.8	1.10	8	26.9
B28	8-9-63	35	1.3	33.7	1.15	8	26.0
B29	8-8-63	35	1.4	33.6	1.45	8	20.6
B30	8-10-63	35	1.5	33.5	1.60	8	20.0
B31	8-10-63	35	1.1	33.9	1.25	8	25.7
32	8-9-63	35	1.1	33.9	1.35	8	23.2
33	8-9-63	35	1.1	33.9	1.285	8	25.3
34	8-9-63	35	1.2	33.8	0.90	8	28.8
35	8-10-63	35	1.3	33.7	0.85	8	32.3
B36	8-10-63	35	1.2	33.8	1.20	8	23.2
37	8-9-63	35	1.0	34.0	0.95	8	30.0
38	8-10-63	35	2.0	33.0	1.00	8	30.5
39	8-10-63	35	2.1	32.9	0.85	8	32.3
40	8-10-63	35	1.4	33.6	1.175	8	27.0
41	8-10-63	35	2.3	32.7	0.875	8	33.8
B42	8-10-63	35	1.8	33.2	1.25	8	23.3
B43	8-9-63	35	0.7	34.3	1.225	8	23.7
B44	8-10-63	35	1.1	33.9	1.15	8	26.0
B45	8-9-63	35	0.6	34.4	1.10	8	26.9
B46	8-10-63	35	0.9	34.1	1.025	8	28.3
B47	8-9-63	35	0.9	34.1	1.225	8	23.7
B48	8-9-63	35	0.5	34.5	1.225	8	23.7

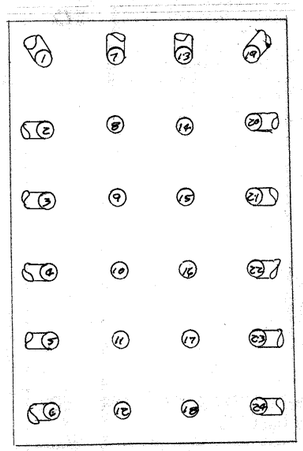

N½ Pier No 2 East Bound Lane

Pile No	Date Driven	Length in Leads nearest ft	Length cut off nearest .1 ft	Length in Structure	Ave. Pen. last 5 blows (inches)	Drop in feet	Bearing in tons
B1	9-6-63	35	0.8	34.2	1.20	8	25.2
B2	9-6-63	35	1.0	34.0	1.10	8	26.9
B3	9-6-63	35	1.1	33.9	0.85	8	32.4
B4	9-5-63	35	0.7	34.3	1.00	8	30.5
B5	9-5-63	35	1.3	33.7	0.90	8	31.2
B6	9-5-63	35	1.1	33.9	1.25	8	23.3
B7	9-6-63	35	0.9	34.1	1.10	8	26.9
8	9-6-63	35	0.8	34.2	0.85	8	34.3
9	9-6-63	35	0.8	34.2	0.85	8	34.3
10	9-5-63	35	0.8	34.2	1.00	8	30.5
11	9-5-63	35	0.7	34.3	1.50	8	21.1
12	9-5-63	35	0.6	34.4	1.10	8	26.9
B13	9-6-63	35	0.7	34.3	0.90	8	33.0
14	9-6-63	35	0.8	34.2	0.60	8	42.4
15	9-6-63	35	1.1	33.9	0.50	8	48.5
16	9-6-63	35	0.9	34.1	0.85	8	34.3
17	9-5-63	35	0.9	34.1	1.00	8	30.5
18	9-5-63	35	0.5	34.5	1.00	8	30.5
B19	9-6-63	35	0.9	34.1	1.25	8	26.0
B20	9-6-63	35	1.1	33.9	0.95	8	28.7
B21	9-6-63	35	0.7	34.3	0.65	8	39.0
B22	9-5-63	35	1.1	33.9	0.75	8	33.3
B23	9-5-63	35	0.3	34.7	0.90	8	31.2
B24	9-5-63	35	1.0	34.0	0.75	8	35.4

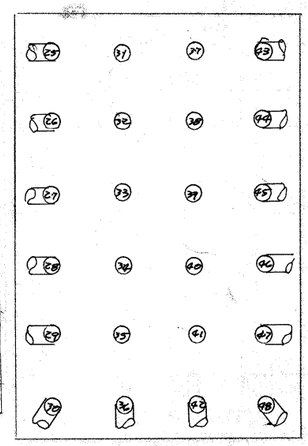

S½ Pier No 2 East Bound Lane

Pile No	Date Driven	Length in Leads nearest ft	Length cut off nearest .1 ft	Length in Structure	Ave. Pen. last 5 blows (inches)	Drop in feet	Bearing in Tons
B25	9-5-63	35	1.4	33.6	1.10	8	26.9
B26	9-5-63	35	1.1	33.9	1.20	8	25.2
B27	9-5-63	35	1.1	33.9	0.90	8	31.2
B28	9-5-63	35	1.0	34.0	0.80	8	33.9
B29	9-5-63	35	1.0	34.0	0.90	8	31.2
B30	9-5-63	35	1.4	33.6	1.05	8	27.8
31	9-5-63	35	0.9	34.1	0.80	8	35.8
32	9-5-63	35	0.8	34.2	0.85	8	34.3
33	9-5-63	35	1.1	33.9	0.85	8	34.3
34	9-5-63	35	1.2	33.8	0.70	8	39.2
35	9-5-63	35	1.1	33.9	0.875	8	33.6
B36	9-5-63	35	1.4	33.6	1.05	8	27.8
37	9-4-63	35	0.8	34.2	1.00	8	30.5
38	9-4-63	35	0.5	34.5	1.35	8	22.5
39	9-4-63	35	0.9	34.1	1.30	8	23.9
40	9-4-63	35	1.1	33.9	0.85	8	34.3
41	9-4-63	35	1.0	34.0	1.10	8	28.4
B42	9-4-63	35	1.3	33.7	1.35	8	22.9
B43	9-4-63	35	1.2	33.8	1.00	8	28.8
B44	9-4-63	35	1.1	33.9	1.05	8	27.8
B45	9-4-63	35	2.4	32.6	1.10	8	26.9
B46	9-4-63	35	1.0	34.0	0.90	8	31.2
B47	9-4-63	35	1.4	33.6	0.85	8	32.4
B48	9-4-63	35	1.3	33.7	0.90	8	33.0

35 ft. Oak & Gum
Type of hammer - Gravity
Gross Weight - 5090
Weight of pile - 1388
I.H.C. hammer No. - 289
Effective Weight - 5080
I.H.C. cap No. - 168
Weight of cap - 1050
Formula used - $P = \frac{3WH}{S+0.35} \times \frac{W}{W+M}$ Vert.

$$P = \frac{(3)(2.54)(8)}{S+0.35} \times \frac{5090}{7528}$$

$$P = \frac{60.96}{S+0.35} \times 0.676$$

$$P = \frac{41.21}{S+0.35}$$

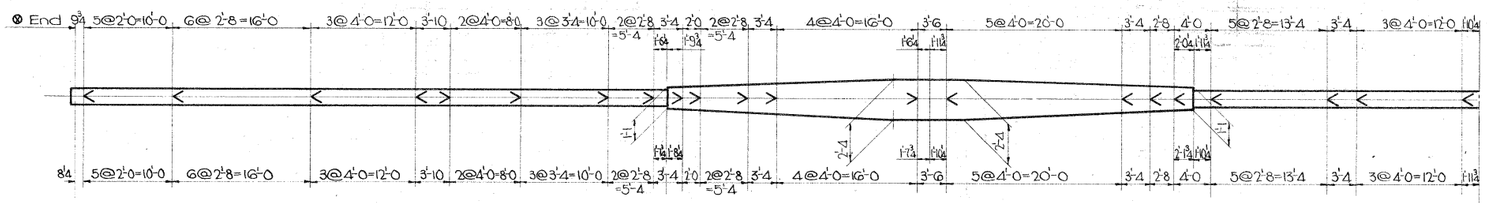

GIRDER SHEAR LUG SPACING

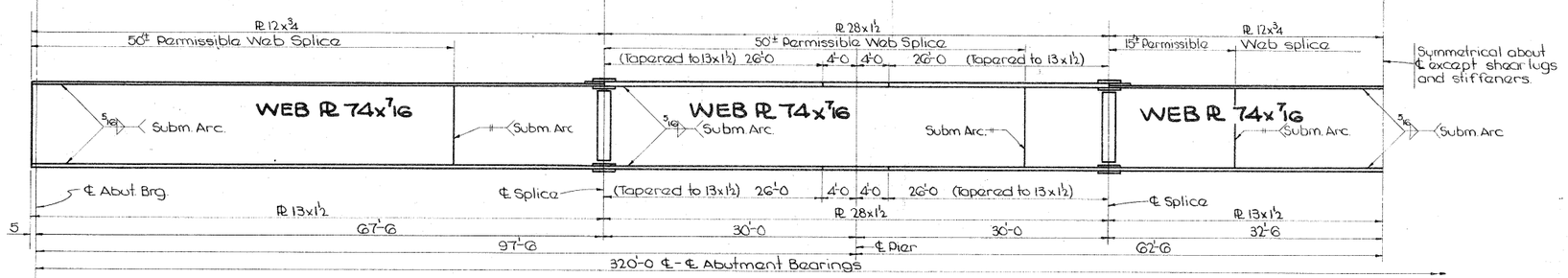

GIRDER DETAIL

WELD NOTE:

The design drawings indicate AWS prequalified welded joints and, unless otherwise noted, the design joint details are for manual shielded metal arc welding. Alternate joint details may be submitted for approval. Flange to web tee joints will not require full penetration of submerged arc fillet weld. Except as noted above, Article 2408.14 of the Iowa State Highway Commission Standard Specifications shall apply.

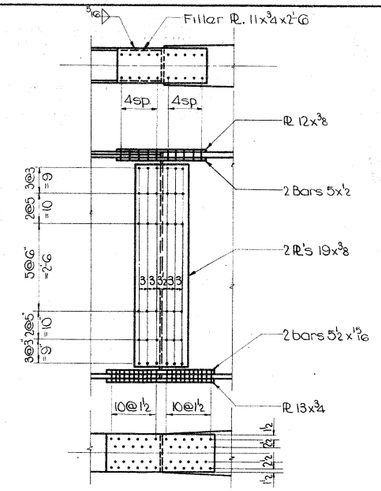

GIRDER SPLICE DETAIL

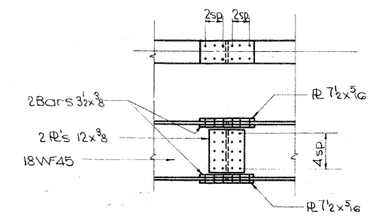

STRINGER SPLICE DETAIL

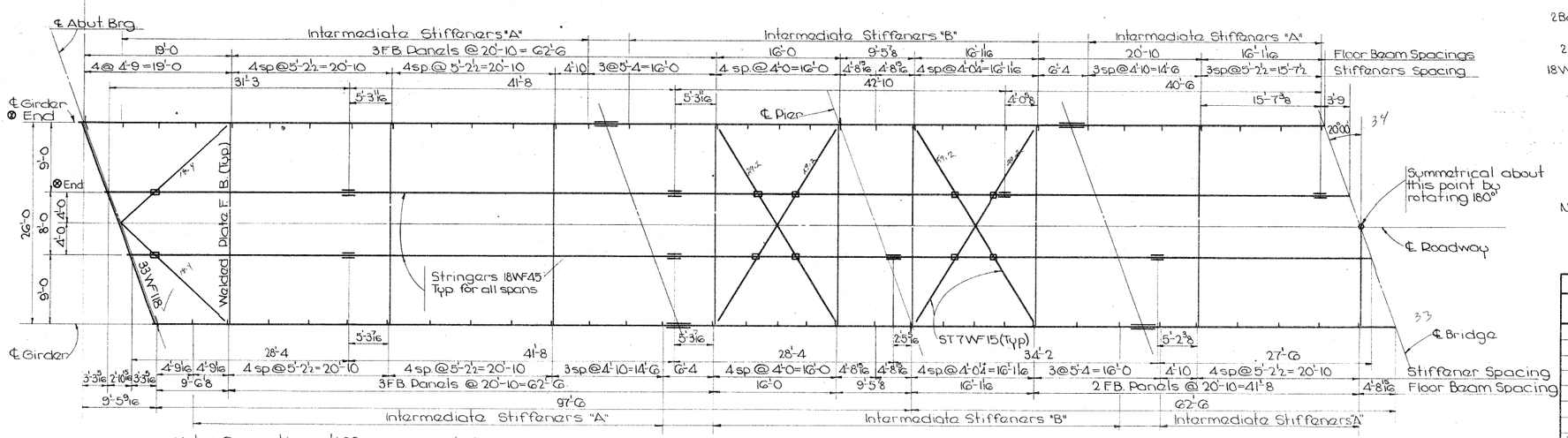

Note: Connecting stiffeners on girder at each end of floor beam ~~are to be~~ staggered as shown to facilitate the erection of floor beam.

□ Indicates cross bracing hangers. See hanger detail Sheet № 9.

STRUCTURAL STEEL LAYOUT

Note: Positive Moments due to D.L. № 2, Live Load and Impact are resisted by composite action of girder and slab. Shear lugs are used to insure composite action. D.L. № 1 includes weight of slab, girders, stringers, floor beams and diaphragms. D.L. № 2 includes weight of curbs, rail and future wearing surfaces. Max Neg Mom increase at Pier is 17.7%

MAXIMUM MOMENTS & REACTIONS

ITEM	LOAD (Kips/ft)	Max Positive Moms. End Span	Max Positive Moms. Cntr Span	Max Neg M At Pier	Max Reactions Abut.	Max Reactions Pier
D.L. № 1	1.980	1085.0	910.0	2940.0	66.3	250.3
D.L. № 2	0.697	445.0	480.0	879.0	25.0	86.5
C.L.L.*	2.146/31.00	/	/	4292/	/	/31.0
U.L.L.	0.763			1083.8		100.4
H20-S16	38.15	1420.0	1491.0		75.8	
Imp.		318.0	298.0	320.0	17.0	27.8
TOTAL				5652.0	184.1	496.0

Note: Moments are in Foot-Kips and Reaction in Kips.
*Upper figure is for Moment, lower figure is for shear.

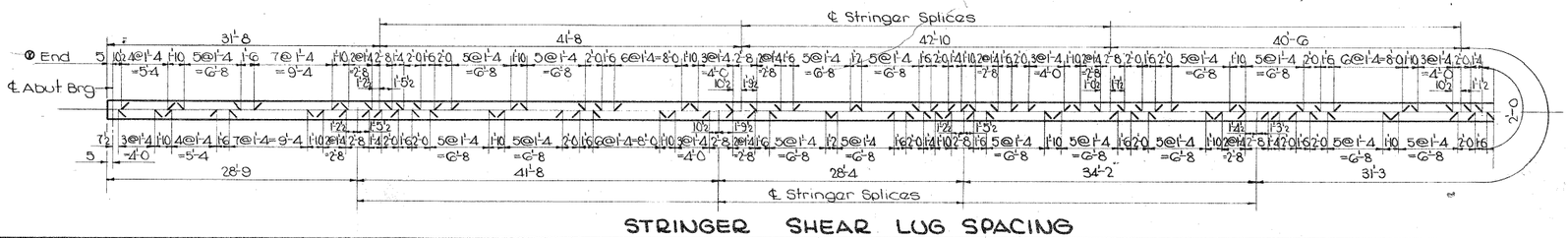

STRINGER SHEAR LUG SPACING

Design for 20° Skew

DUAL 320'-0 x 30' CONTINUOUS WELDED GIRDER BRIDGES AND WELDED WIRE RETARD

97'-6 End Spans ; 125'-0 Interior Span

Concrete floor & substructure — Tubular handrail

SUPERSTRUCTURE DETAILS

Station: 1301+20.00 — Project № FU-1065(10)

STORY County — Iowa State Highway Commission

December 1962 — Sheet 8 of 15

Design № 3061 — Story Co. — File № 21508

DIETZGEN NO. 131 ARKWRIGHT

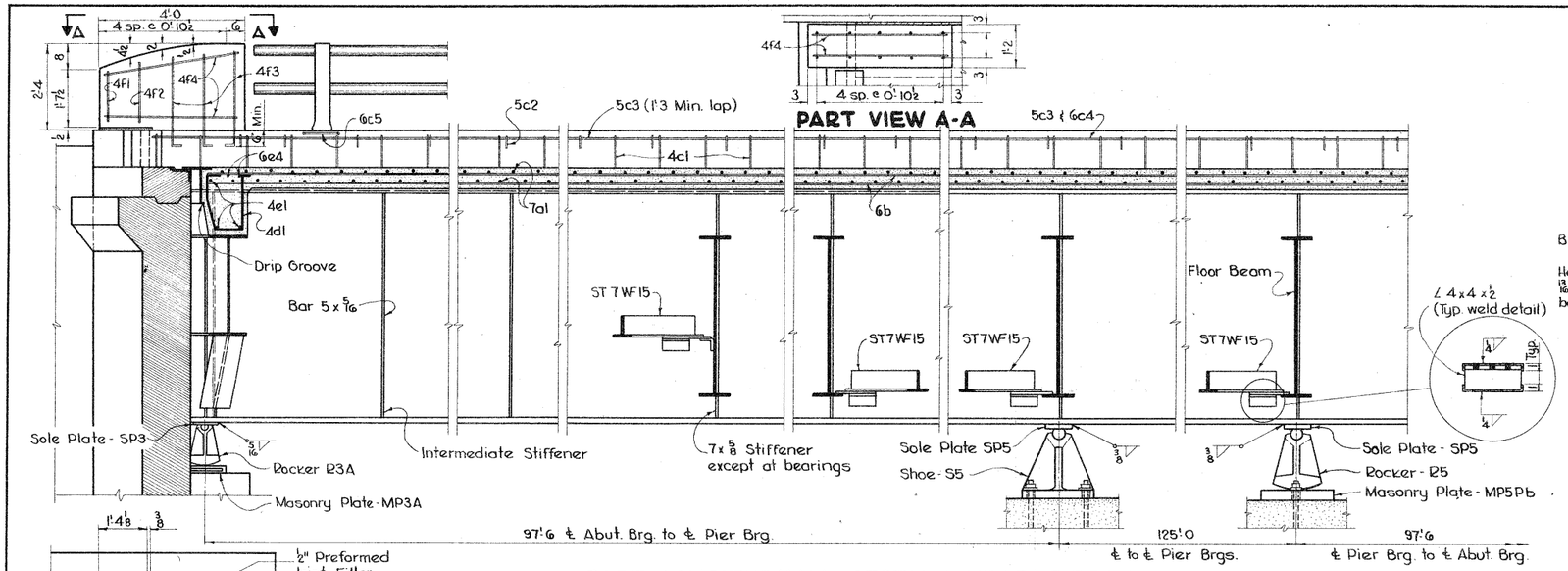

PART VIEW A-A

PART LONGITUDINAL SECTION NEAR GIRDER

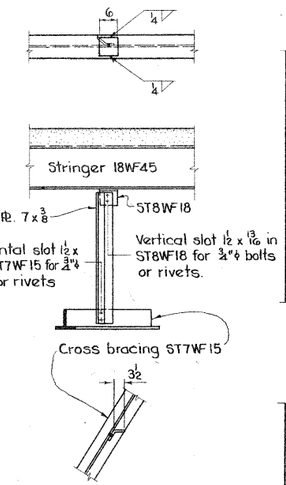

TYPICAL CROSS BRACING HANGER DETAIL

(See "Structural Steel Layout" on Sheet 8 for location of hangers.)

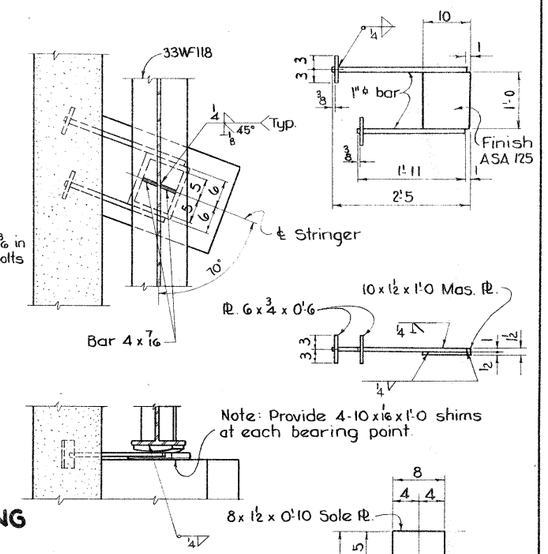

BEARING DETAIL OF ABUTMENT FLOOR BEAM

See "Bearing Notes" Sheet 12.

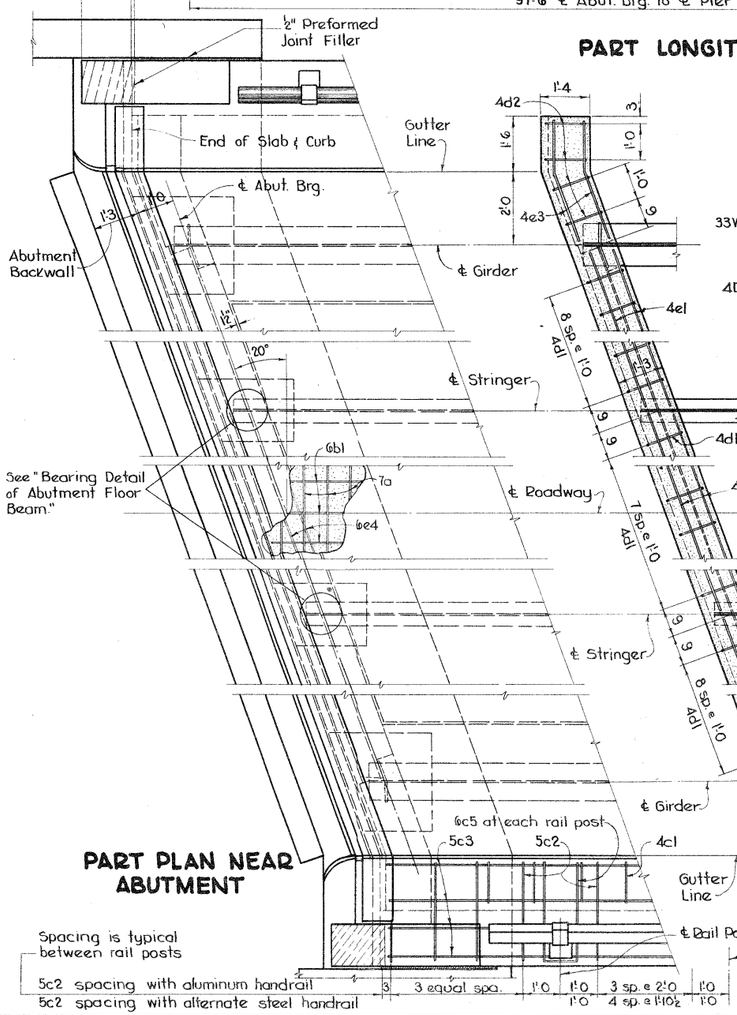

PART PLAN NEAR ABUTMENT

SECTION BELOW FLOOR SLAB SHOWING ABUT. CONC. DIAPH. DETAIL

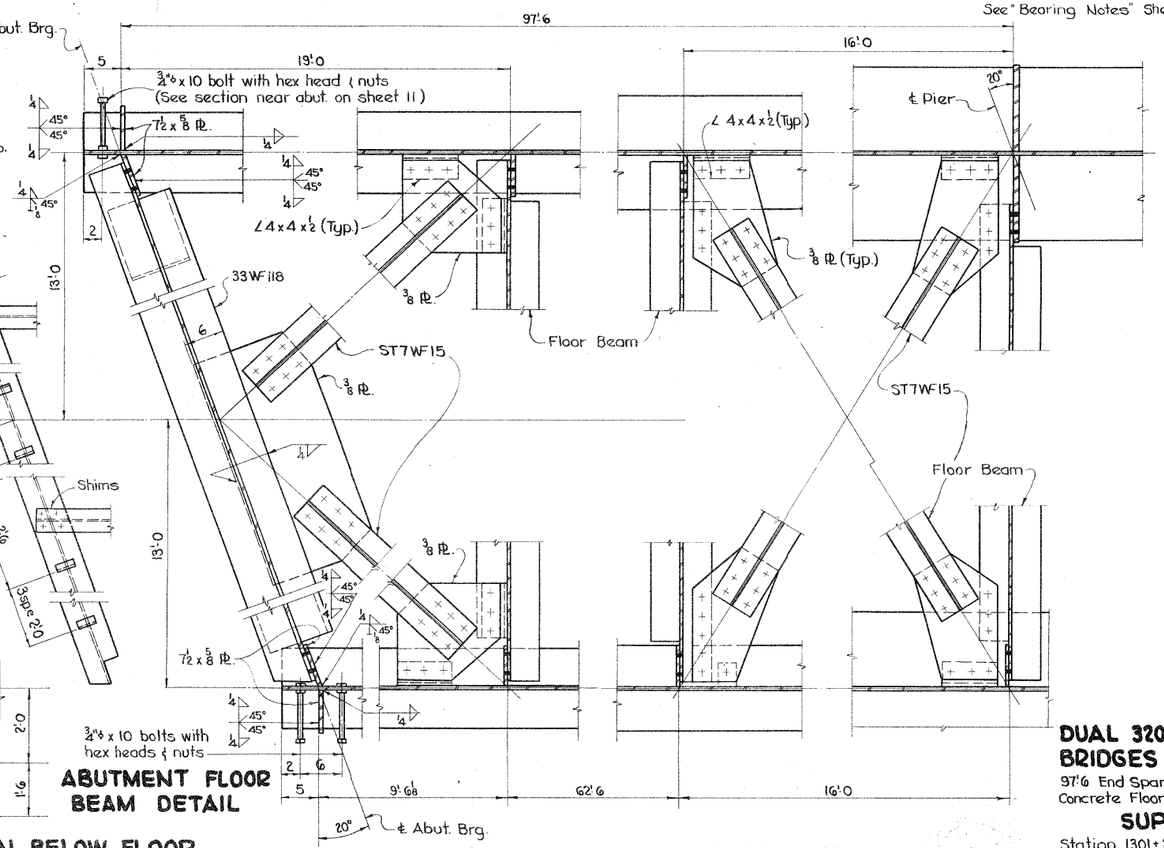

ABUTMENT FLOOR BEAM DETAIL

CROSS BRACING CONNECTION DETAIL

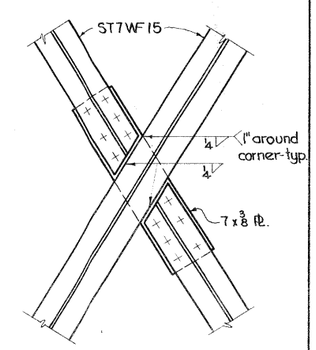

TYPICAL INTERSECTION DETAIL FOR LATERAL BRACING

Design for 20° Skew

DUAL 320'-0 x 30' CONT. WELDED GIRDER BRIDGES AND WELDED WIRE RETARD

97'-6 End Spans — 125'-0 Interior Span

Concrete Floor & Substructure — Tubular Handrail

SUPERSTRUCTURE DETAILS

Station 1301+20.00 — Project № FU-1025(10)

STORY COUNTY

Iowa State Highway Commission

December 1962 — Sheet 9 of 15

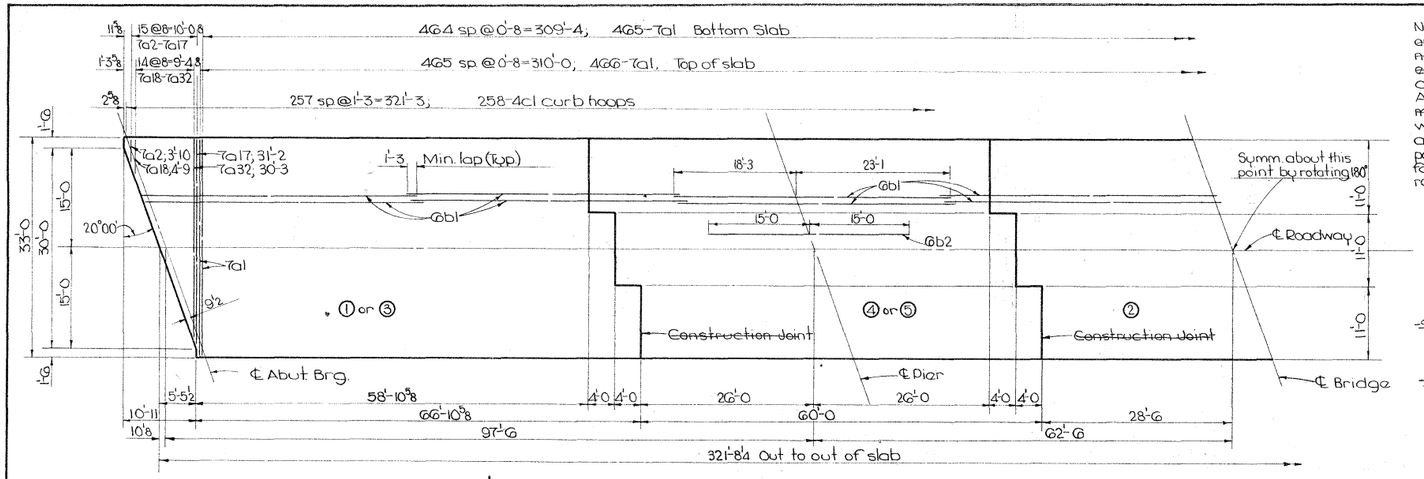

REINFORCING PLAN & CONCRETE PLACEMENT DIAGRAM

Note: Roadway slab ~~shall be placed in sections and in sequences as indicated in circled numbers and preferably at intervals not exceeding 24 hours~~ was placed continuously. Curbs ~~may be~~ were placed continuously.
Alternate procedures for placing concrete ~~may be~~ were submitted for approval together with a statement of the proposed method and evidence that the contractor possesses the necessary equipment and facilities to accomplish the required result.

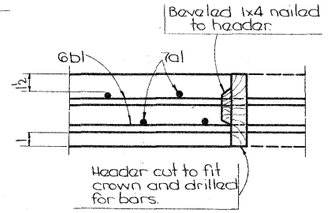

SLAB CONSTRUCTION JOINT DETAIL

REINFORCING STEEL-ONE SUPERSTRUCTURE					
Bar	Location	Shape	№	Length	Weight
7a1	Slab, transverse, top & bottom	—	931	32'-8	62,164
7a2-17	" " , end, "	—	32	Varies	1,145
7a18-32	" " " , top	—	30	Varies	1,073
6b1	Slab, longitudinal, top & bottom	—	408	41'-4	25,330
6b2	" " , Over Piers	—	44	30'-0	1,983
4c1	Curb, hoops		516	4'-5	1,522
*5c2	Curb, transverse		~~426~~ 426	2'-9	~~1,145~~ 941
5c3	Curb, longitudinal	—	72	36'-10	2,726
6c4	" " , Over Piers	—	12	30'-0	541
*6c5	Rail Post Anchor		~~520~~ 68	5'-6	~~2,861~~ 522
4d1	Abutment Diaphragm Hoops		52	4'-8	162
4d2	" " End Hoops		16	3'-3	35
4e1	" " , longit.	—	12	9'-3	74
4e2	" " "	—	6	8'-1	32
4e3	" " " , End		16	3'-4	36
6a4	" " " , Top	—	4	31'-9	191
4f1	End Post, Vertical	—	8	1'-7	8
4f2	" " "	—	8	2'-0	11
4f3	" " "		24	3'-1	49
4f4	" " , Horizontal	—	16	3'-9	40
					~~48,717 lb~~
	Total				~~98,762 lb~~

* ~~For Aluminum Rail. (See sheet 15 for steel rail.)~~

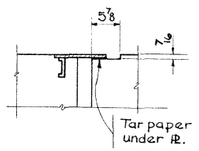

SECTION F-F

	E. Abut.	W. Abut.
Temp.	"D"	"D"
10°	3 9/16"	2 13/16"
50°	2½"	2½"
90°	1 15/16"	2 3/16"

Note: Proportionate values ~~are to be~~ used for other temperatures.

EXPANSION PL SETTINGS

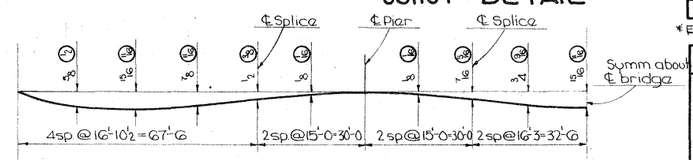

TOTAL ANTICIPATED DEAD LOAD DEFLECTION

Note: Encircled figures indicate deflection anticipated when concrete floor is placed.

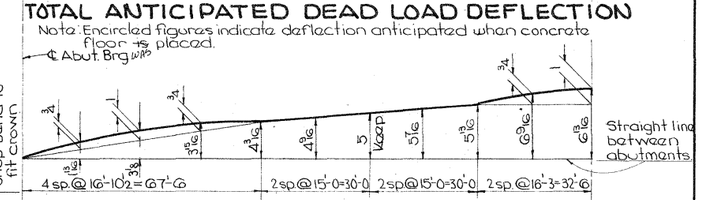

GIRDER AS FABRICATED & ERECTED

Note: 18WF45 Stringers ~~to be~~ fabricated with natural camber downward.

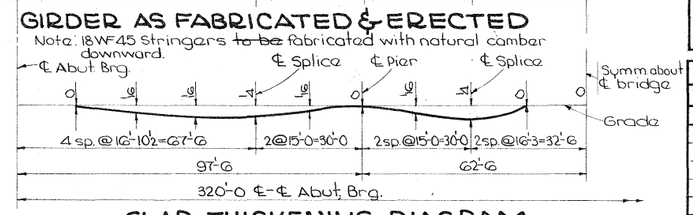

SLAB THICKENING DIAGRAM

(For Estimating Purposes Only)

BENT BAR DETAILS

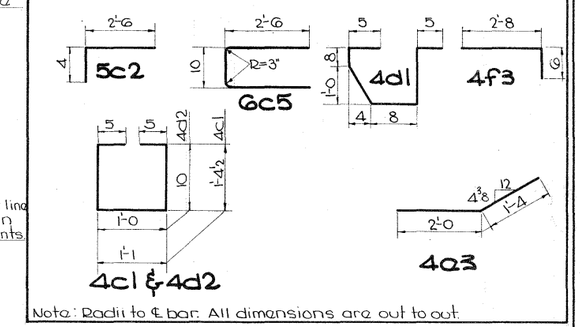

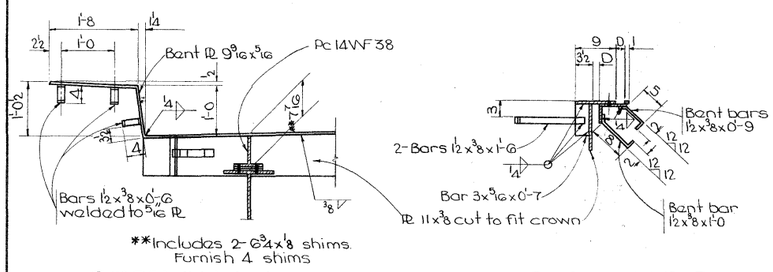

SECTION A-A SECTION B-B SECTION C-C

SUPERSTRUCTURE-CONC. PLACEMENT QUANTITIES	
Location	Quant's
Rdwy. Slab 2@54.0 ① or ③	108.0
②	49.8
2@45.9 ④ or ⑤	91.8
Curbs	6.4
End Posts	1.5
Total for one superstr.	315.2 cy

ESTIMATED QUANT'S. TWO SUPERSTRUCTURES	
Item	Amount
Concrete	630.4 cy
*Reinforcing Steel	~~197,552 lb~~
Structural Steel	~~519,420 lb~~
	572,310

* ~~For Aluminum Rail. (See sheet 15 for steel rail.)~~

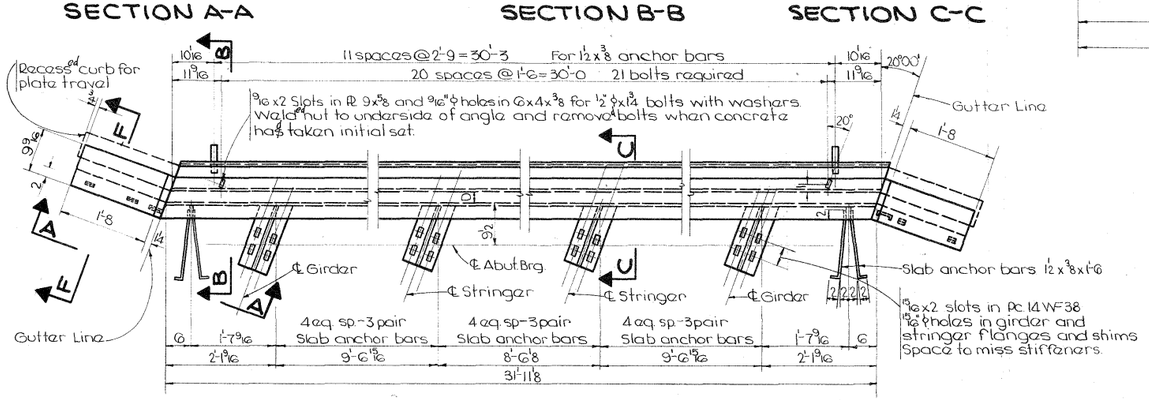

EXPANSION PLATE DETAILS

Two required for each bridge
Wt. = 1772 lbs. each

ROCKER SETTINGS				
	West Abut.	PIER № 1	PIER № 2	East Abut.
Temperature at time of setting		Fixed		
10°	−5/16		−3/8	−11/16
50°	0		0	0
90°	+5/16		+3/8	+11/16

Rocker positions shown indicate + dimensions
Proportionate values ~~are to be~~ used for other temperatures.

Revised 5-6-63: Structural Steel quantity corrected.

Design for 20° Skew
DUAL 320'-0 x 30' CONTINUOUS WELDED GIRDER BRIDGES AND WELDED WIRE RETARD

97'-6 End Spans 125'-0 Interior Span
Concrete floor & substructure Tubular handrail

SUPERSTRUCTURE DETAILS

Station 1301+20.00 Project № FU-1065(10)

STORY COUNTY
Iowa State Highway Commission
December 1962 Sheet 10 of 15

Design № 3061 Story County File № 21508

Designed by: [illegible] Traced by [illegible] Checked by: [illegible]

DIETZGEN NO 131 ARKWRIGHT

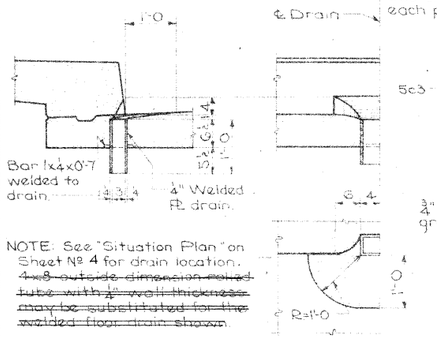

NOTE: See "Situation Plan" on Sheet № 4 for drain location. ~~4x8 outside dimension round tube with ⅛" wall thickness may be substituted for the welded floor drain shown.~~

Ea. Bridge 16 req'd. Wt. 20 lb each

DRAIN DETAILS

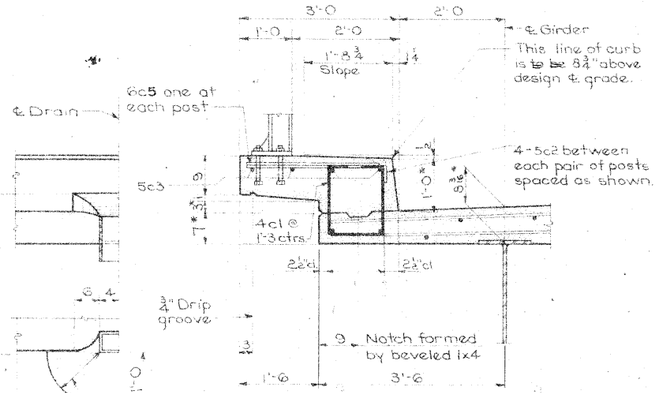

CURB DETAILS

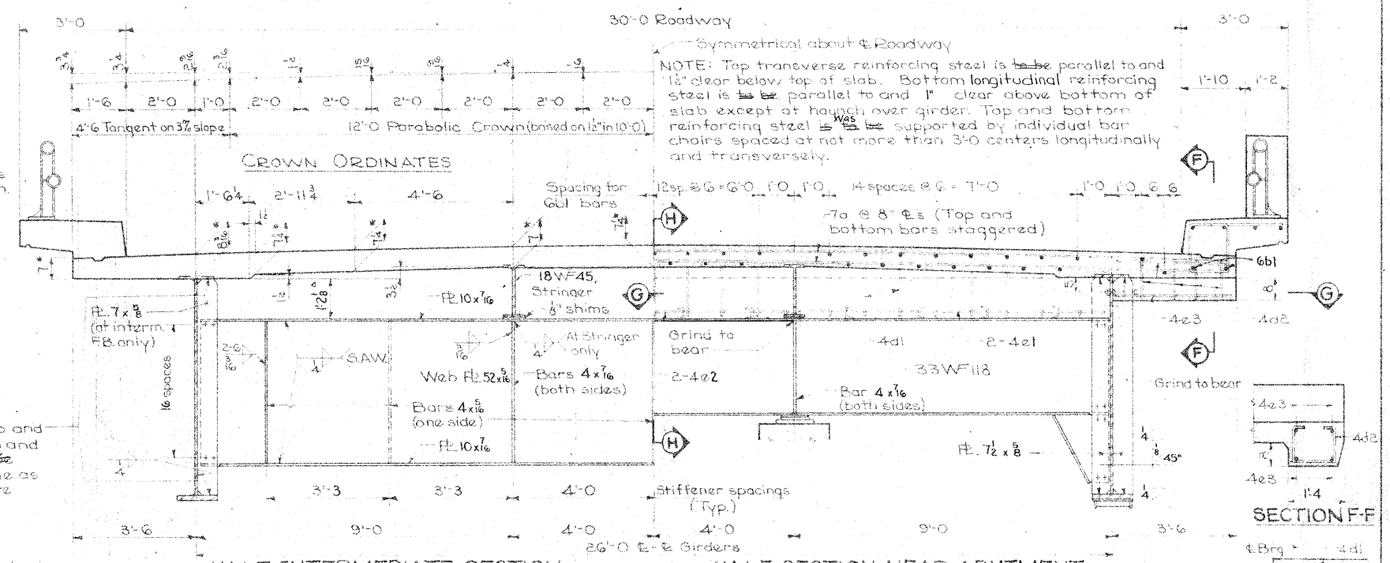

HALF INTERMEDIATE SECTION

HALF SECTION NEAR ABUTMENT

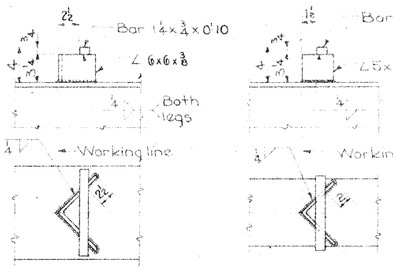

Wt. 7.12 lb. each
200 req'd. Ea. Bridge

SHEAR LUGS FOR GIRDERS

Wt. 5.96 lb. each
432 req'd. Ea. Bridge

SHEAR LUGS FOR STRINGERS

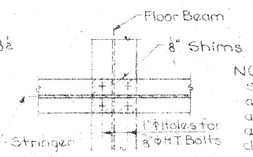

TYPICAL STRINGER TO FLOOR BEAM CONNECTION

NOTE: All floor beam stiffeners ~~are to~~ have a close fit with the top and bottom flange, and ~~are to be~~ were clipped 1" to clear longitudinal web weld.

℄ Cross Sectional Area of Slab	= 20.454 sq. ft.
Cross Sectional Area of One Curb	= 2.689 sq. ft.

* Indicating nominal dimensions.
△ Including two ⅛" shims. Provide four at each stringer connection.
SAW = Submerged arc welding.

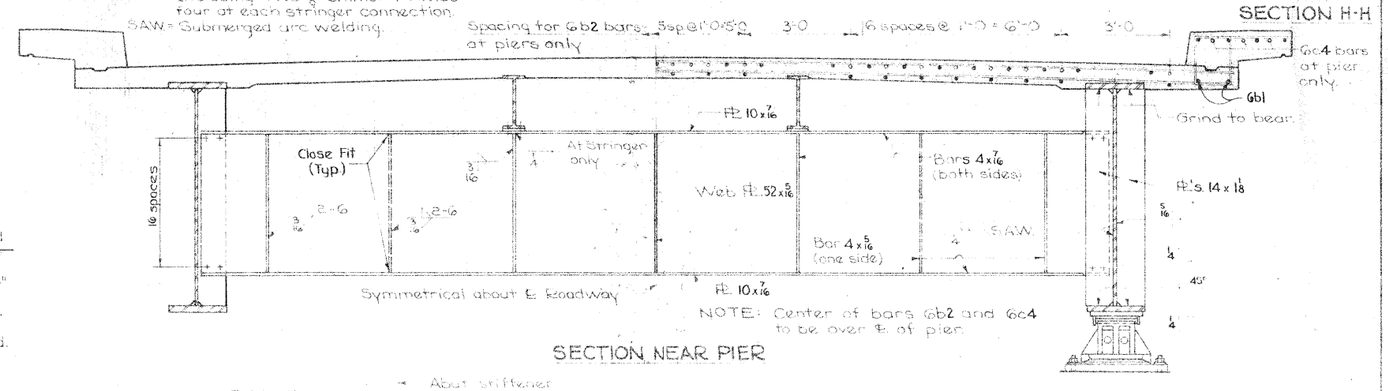

SECTION NEAR PIER

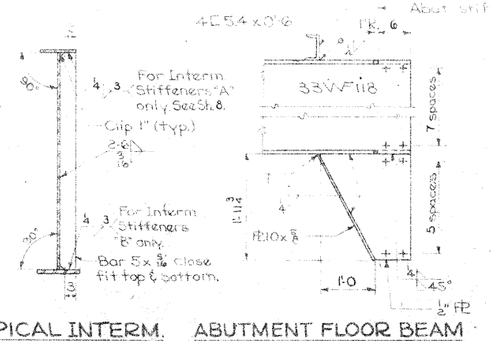

TYPICAL INTERM. STIFFENER DETAIL (Main Girder)

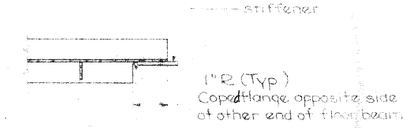

ABUTMENT FLOOR BEAM END CONNECTION DETAIL

SUPERSTRUCTURE NOTES:

This bridge ~~is~~ was designed for H 20-S16 loading and alternate loading designated in the Bureau of Public Roads P.R.M. 20-4, Section C, plus 19 lb. per sq. ft. of roadway for future wearing surface.

The floor slab as shown includes ½" of wearing surface.

All field connections, except as noted, ~~are to be riveted or~~ bolted using high tensile strength bolts. The estimated weight ~~is~~ was 19 kips per foot of structural steel ~~to be used in riveted connections~~.

Unless otherwise noted, all bolts ~~or rivets~~ are ~~to be~~ ¾" ϕ and all open holes are ~~to be~~ 13/16" ϕ.

The girder splices ~~are to be~~ were supported by temporary ~~work or~~ other approved means as directed by the Engineer, and adjusted as closely as possible to the dimensions shown on the diagram "Girder As Fabricated And Erected" before ~~riveting and~~ bolting ~~is~~ was completed.

The parts of structural steel inaccessible after erection ~~are to be~~ were given three coats of paint in the shop.

~~All structural steel to be ASTM A-36 Steel.~~

All flange plates, flange splice plates and web splice plates are ~~to be~~ U.M. plates except flange plates that are cut to taper.

The flange plates for all floor beams except the abutment ~~shall be~~ are coped near side on one end and far side on the other end.

Flange and web plates of main floor beam girders, stringers, bearing stiffeners, and splice plates shall conform to A.S.T.M. Specification for A-36 Carbon Steel. All other structural steel, except as noted, shall conform to the A.S.T.M. Specifications for A-7, A 373, or A-36 Carbon Steel.

~~Approved stud shear connectors may be used as an alternate for the angle shear connectors shown.~~ If studs are used, each angle lug 5x5x⅜ is to be replaced by a group of 8-⅞"ϕx4" studs, and each angle lug 6x6x⅜ is to be replaced by a group of 10-⅞"ϕx4" studs. The centroid of the stud group is to be in the approximate location of the angle lug replaced. Maximum spacing between ℄ of stud rows is to be 24" and where the angle lug spacing exceeds 24" the equivalent studs are to be located in two or more rows so that the maximum spacing is not exceeded. Studs are to be welded in the shop at the locations shown on shop drawings approved by the Iowa State Highway Commission.

Shear lugs are spaced in multiples of the slab transverse reinforcing bar spacing and are located so as to clear bottom transverse bars.

Paint ~~is to be~~ was omitted on tops of top flanges and all other steel surfaces in contact with concrete.

The forms for roadway slab and curbs ~~are to be~~ were supported by stringers, floor beams and girders.

SPECIFICATIONS:

DESIGN: A.A.S.H.O., Series of 1961.
CONSTRUCTION: Iowa State Highway Commission Standard Specifications, Series of 1960, plus current Special Provisions and Supplemental Specifications.

Revised 2-27-63; Superstructure Notes changed to designate use of different steels.

Revised 11-15-62 Slab reinforcing at pier changed & intermediate weld on girder stiffeners changed.

Design for 20° Skew

DUAL 320'-0 x 30' CONTINUOUS WELDED GIRDER BRIDGES AND WELDED WIRE RETARD

97'-0 End Spans — 125'-0 Interior Span
Concrete Floor & Substructure — Tubular Handrail

SUPERSTRUCTURE DETAILS

Station 1301 + 20.00 — Project № FU-1065(10)

STORY COUNTY

IOWA STATE HIGHWAY COMMISSION
Sheet 11 of 15
December 1962

Design № 3061 — Story County — File № 21508

Checked by: H.B.M.

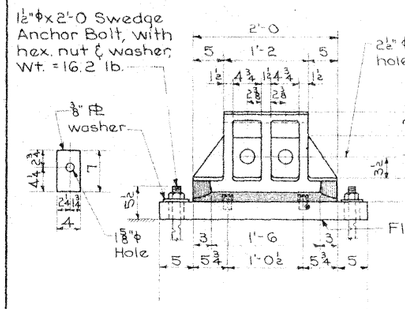

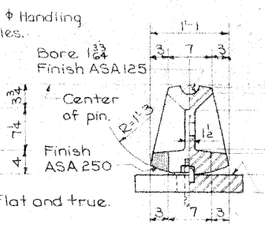

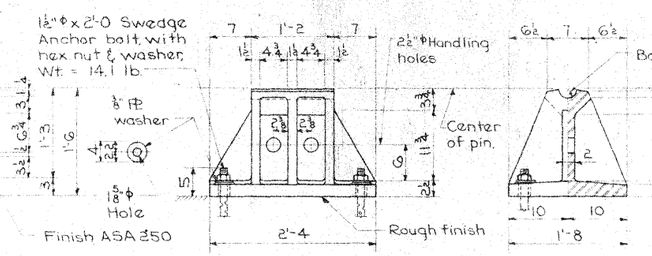

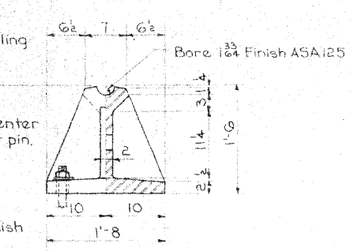

ROCKER R4

Wt. = 464 lb.

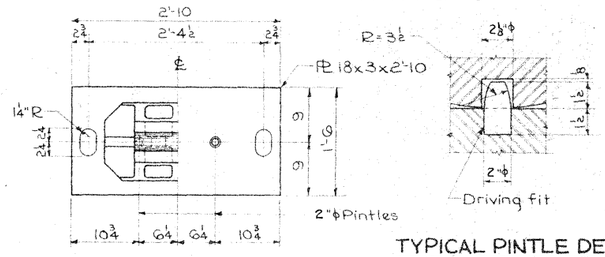

TYPICAL PINTLE DETAIL

PIER MASONRY PLATE MP4P

Wt. = 497 lb.

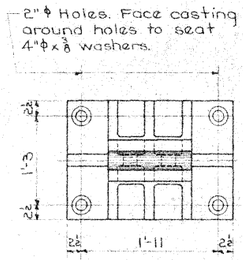

FIXED SHOE S4

Wt. = 735 lb.

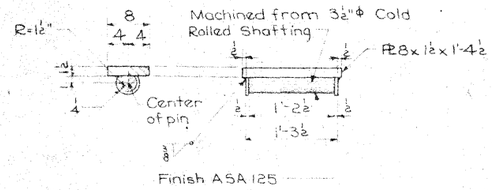

SOLE PLATES SP4 FOR R4 & S4

Wt. = 85 lb

BEARING NOTES:

Nodular Iron Castings ~~shall~~ complied with Article 4153.04 of the Standard Specifications and with ASTM A-339, Grade 60-45-10.

The following ~~shall be~~ are Nodular Iron Castings:

~~R4 MP4P S4~~
R5 MP5Pb S5

All plates and bars ~~shall~~ comply with ASTM A-36. Pins shall comply with Article 4153.02 of the Standard Specifications and with ASTM A-108.

All bearings ~~are to be~~ were set in paint and canvas.

Anchor bolts ~~shall be set~~ were set in accordance with Article 2408.46 of the Standard Specifications.

After, masonry plates, rockers and shoes are in correct location, poured mortar around anchor bolts to fill slotted holes.

The weight of bearings shown does not include the weight of paint.

Surface finished with an ASA 125 Finish ~~shall be~~ was shop coated with an application of white lead and tallow as soon as the surfacing process ~~is~~ was done. The shop coated surfaces ~~are to be~~ were wiped clean and then a field coat of white lead and tallow ~~is to be~~ was applied just before the erection of structural steel in the field.

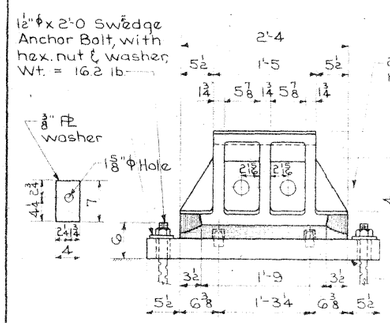

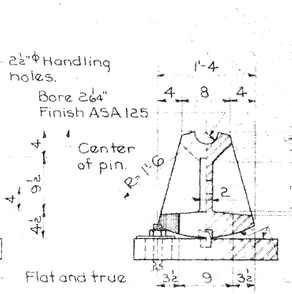

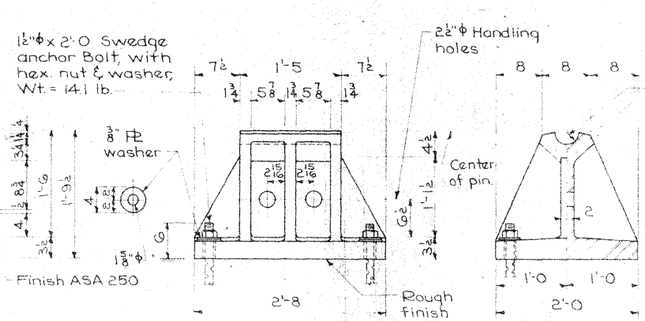

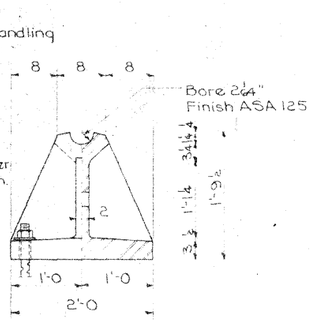

ROCKER R5

Wt. = 776 lb.

DISTANCE FROM TOP OF SOLE PLATE TO BRIDGE SEAT	
Rockers & Fixed Shoes	* 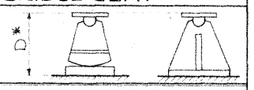
R4 & S4	* 1'-8 9/16
R5 & S5	* 2'-0 13/16

* Including 1/16" paint and canvas. Varies with changes in sole plate thickness, as shown in table at left.

~~* Note: Sole Plate is~~ was to be thickened by amounts shown and at locations shown in the following table.

Lane	Pier	Girder	Amount
W.B.	1	S.	5/16
E.B.	1	S.	¼
W.B.	2	N.	¼
E.B.	2	N.	5/16

MAXIMUM REACTION (In Kips)	
R4 S4	R5 S5
475	650

Note: Used SP5, S5, R5, and MP5Pb from this sheet for pier bearing material.

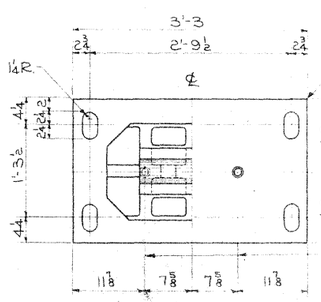

PIER MASONRY PL MP5Pa FOR SPAN LENGTH GREATER THAN 150'

Wt. = 877 lb.

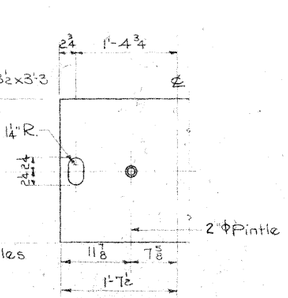

PIER MASONRY PL MP5Pb FOR SPAN LENGTH 101' TO 150'

Wt. = 897 lb.

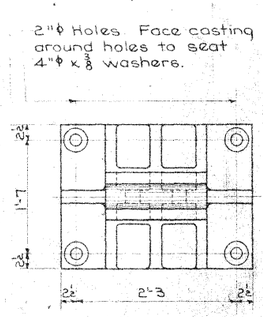

FIXED SHOE S5

Wt. = 1274 lb.

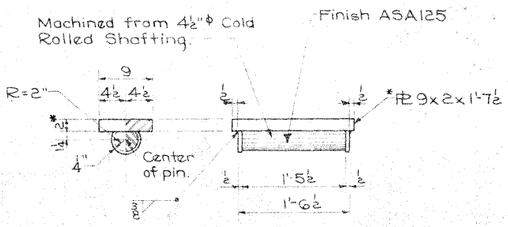

SOLE PLATES SP5 FOR R5 & S5

Wt. = 159 lb

Design for 20° Skew

DUAL 320'-0 x 30' CONTINUOUS WELDED GIRDER BRIDGES AND WELDED WIRE RETARD

97'-6 End Spans — 125'-0 Interior Span

Concrete Floor & Substructure — Tubular Handrail

BEARING DETAILS

Station 1301+20.00 — Project № FU-1025(10)

STORY COUNTY

Iowa State Highway Commission

December 1962 — Bearing Standard Sheet 1009 — Sheet 12 of 15

1009

Design 3061 — Story County — File № 21508

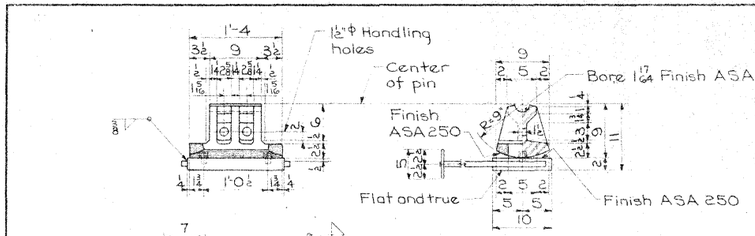

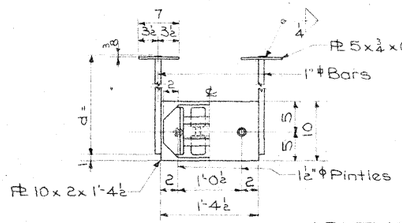

ROCKER R1A Wt. = 143 lb
ABUTMENT MASONRY PLATE MP1A Wt.* = 110 lb.
* Wt. does not include 1"Φ bars

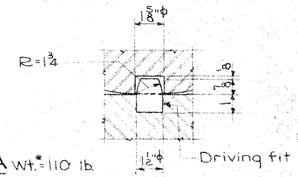

TYPICAL PINTLE DETAIL

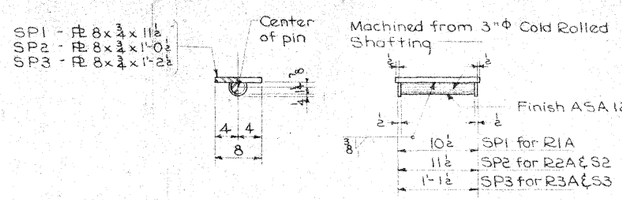

SOLE PLATE SP1, SP2 & SP3

Wt. SP1 = 34 lb.
SP2 = 37 lb.
SP3 = 43 lb.

BEARING NOTES:

The casting of ~~R1A~~, ~~R2A~~, S2, R3A and S3 shall complied with Article 4153.04 of the I.H.C. Standard Specifications.

The masonry plates marked ~~MP1A~~, ~~MP2A~~, ~~MP2P~~, MP3A and ~~MP3P~~ shall complied with the requirements of ASTM A-36 steel.

The pins shall complied with Article 4153.02 of the I.H.C. Standard Specifications and with the requirements of ASTM A-108 steel.

All bearings are to be set in paint and canvas.

Anchor bolts shall be set in accordance with Article 2408.46 of the I.H.C. Standard Specifications.

After masonry plates, rockers and shoes are in correct location, poured mortar around anchor bolts to fill the slotted holes.

The weight of bearings shown does not include the weight of paint.

Surfaces finished with an ASA 125 finish shall be shop coated with an application of white lead and tallow as soon as the surfacing process is done. The shop coated surfaces are to be wiped clean and then a field coat of white lead and tallow is to be applied just before the erection of structural steel in the field.

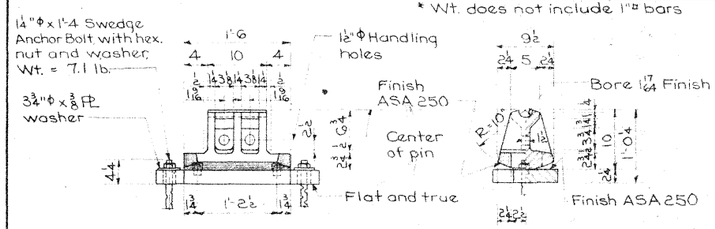

ROCKER R2A
Wt.=178 lb.

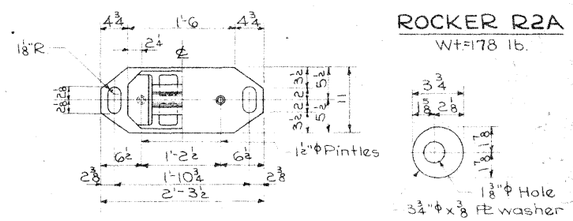

PIER MASONRY PLATE MP2P
Wt. = 160 lb.

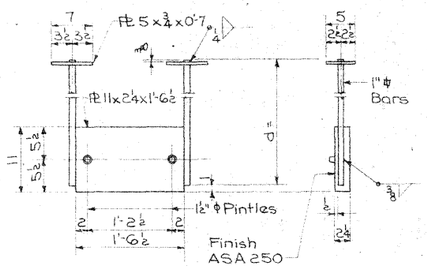

ABUTMENT MASONRY PLATE MP2A
Wt. 146 lb. (Does not include 1"Φ bars)

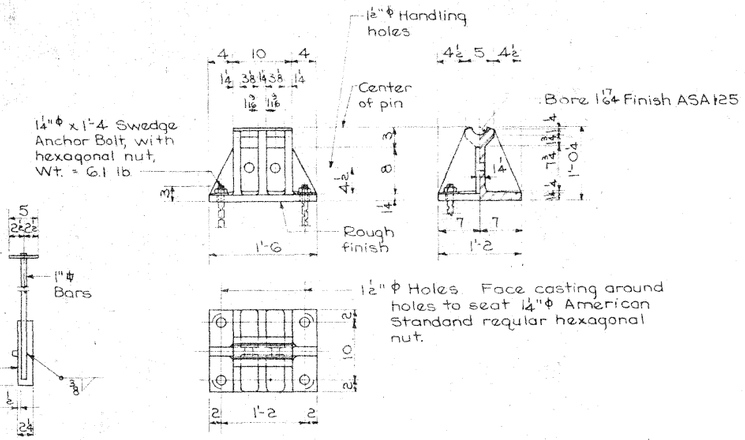

FIXED SHOE S2
Wt.=222 lb.
(Similar to S2 V12-1)

DISTANCE FROM TOP OF SOLE PLATE TO BRIDGE SEAT	
Rockers & Fixed Shoes	*
R1A	1'-0 11/16
R2A & S2	1'-1 15/16
R3A & S3	1'-4 3/16

* Including 1/16" paint and canvas.

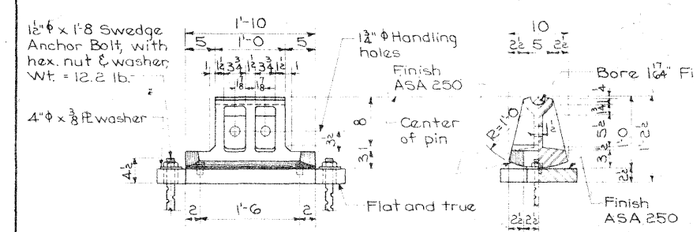

ROCKER R3A
Wt.= 259 lb.

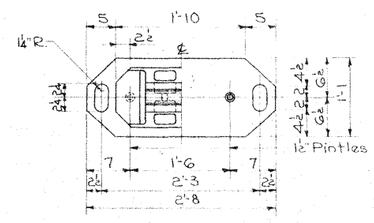

PIER MASONRY PLATE MP3P
Wt. = 249 lb.

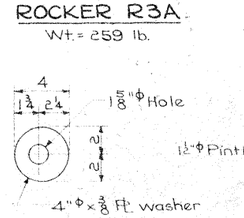

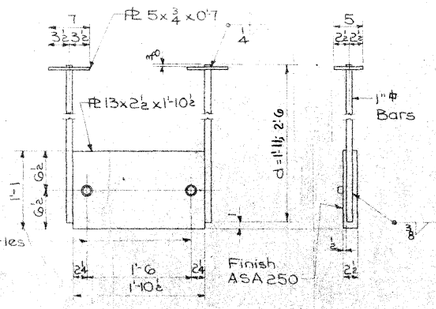

ABUTMENT MASONRY PLATE MP3A
Wt. = 224 lb. (Does not include 1"Φ bars)

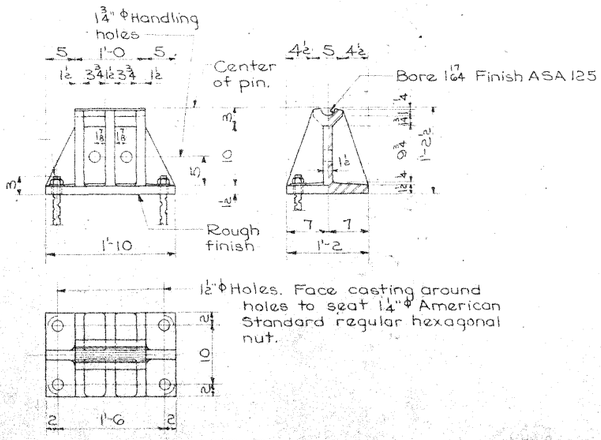

FIXED SHOE S3
Wt. = 349 lb.
(Similar to S1 V10A-7)

MAXIMUM REACTION (In Kips)		
R1A	R2A S2	R3A S3
132	171	263

Note: Use SP3, R3A, and MP3A from this sheet for abutment bearing material.

Design for 20° Skew

DUAL 320'-0 x 30' CONTINUOUS WELDED GIRDER BRIDGES AND WELDED WIRE RETARD

97'-6 End Spans — 125'-0 Interior Span
Concrete Floor & Substructure — Tubular Handrail

BEARING DETAILS

Station 1301 + 20.00 — Project № FU-1065(10)

STORY COUNTY

Iowa State Highway Commission

December, 1962 — Bearing Standard Sheet 1008 — Sheet 13 of 15

1008

Design 3061 — Story County — File № 21508

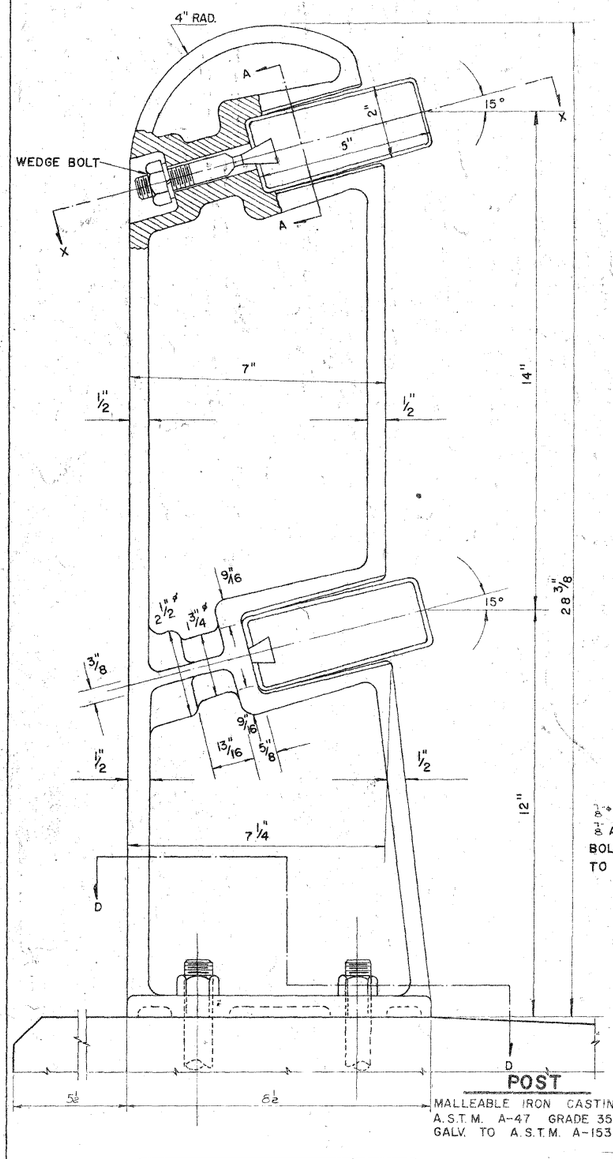

POST

MALLEABLE IRON CASTING
A.S.T.M. A-47 GRADE 35018
GALV. TO A.S.T.M. A-153-53

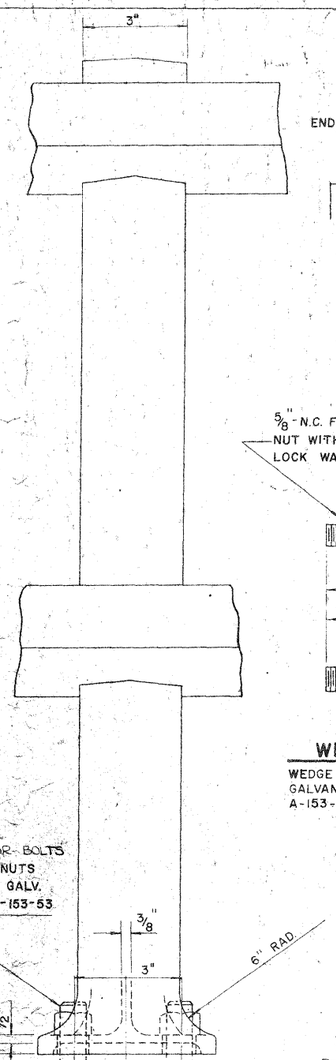

3/8" x 0'-9" ANCHOR BOLTS
3/8" A.S.H. HEX. NUTS
BOLTS & NUTS GALV.
TO A.S.T.M. A-153-53

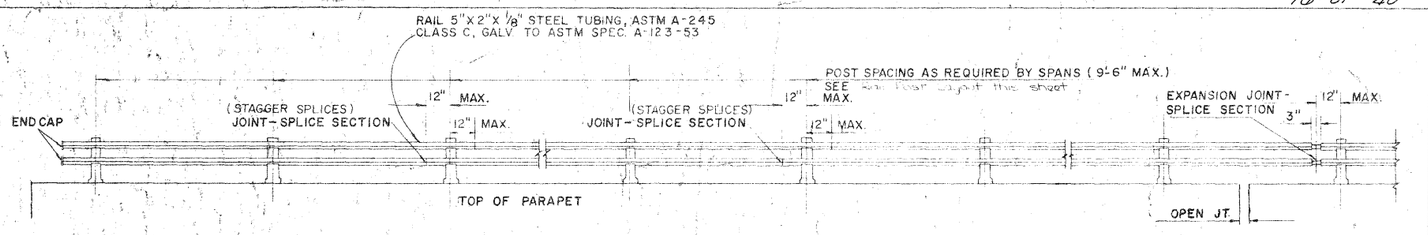

TYPICAL ELEVATION OF RAILING

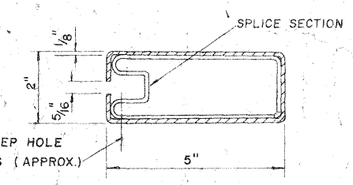

SECTION C-C

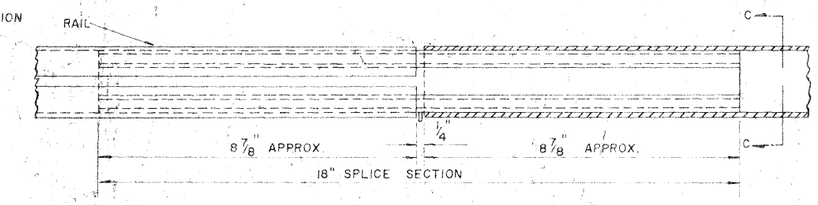

TYPICAL SPLICE JOINT

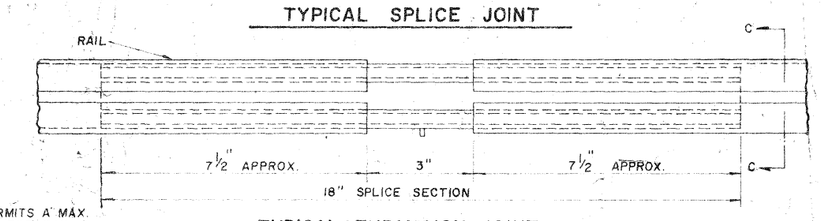

TYPICAL EXPANSION JOINT

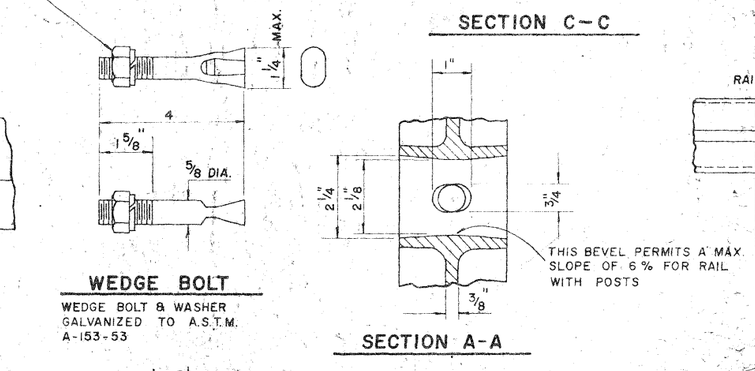

WEDGE BOLT

WEDGE BOLT & WASHER
GALVANIZED TO A.S.T.M.
A-153-53

SECTION A-A

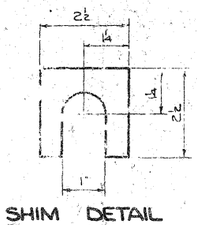

SHIM DETAIL

Provide 4-1/16" thick galvanized shims each post.

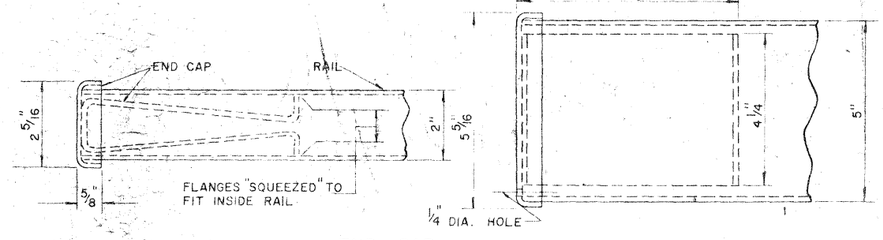

END CAP

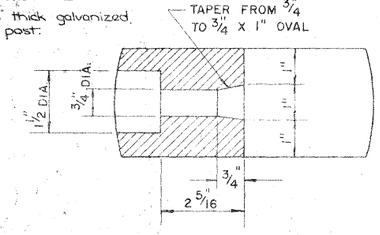

SECTION X-X

STEEL HANDRAIL NOTES -

The steel handrail will be bid on a lineal foot basis measured from centerline to centerline of end posts. The price bid for "Steel Handrail" shall be full compensation for furnishing all material including the anchor bolts and all equipment and labor required to erect the rail in accordance with these plans and Specifications.

No painting will be required.

For handling, storage and installation of steel handrail, Section 2414.06 of the Standard Specifications shall applied.

Each rail section must passed thru at least three posts before being spliced, for as many rail sections as possible.

STEEL HANDRAIL QUANTITIES

Steel Handrail (℄ - ℄ End Posts)				1254.0 Lin. Ft.	
If Steel Handrail is used, the superstructure reinforcing steel quantities shall be modified as noted at right	Change	No	Bar	Length	Weight
	+	36	5c2	2'9	+104
	−	24	6c5	5'6	-198
					-94

Note that anchor bolt spacing for steel rail posts is not the same as for aluminum posts.

* Quantities shown are for two bridges.

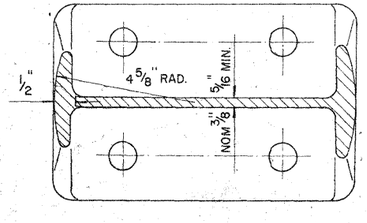

SECTION D-D

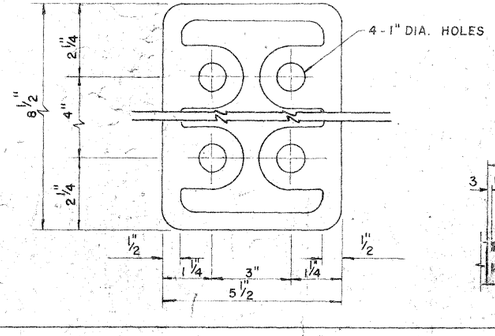

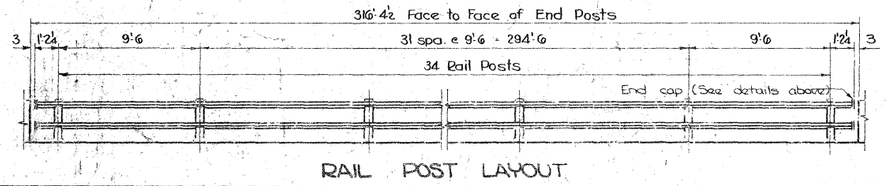

RAIL POST LAYOUT

Design for 20° Skew

DUAL 320'-0 x 30' CONTINUOUS WELDED GIRDER BRIDGES AND WELDED WIRE RETARD

97'-6 End Spans — Concrete Floor & Substructure

125'-0 Interior Span — Tubular Handrail

STEEL HANDRAIL DETAILS

Station 1301 + 20.00

Project № FU-1065(10)

STORY COUNTY

Iowa State Highway Commission

December 1962

Sheet 15 of 15

Design 3061 — Story County — File № 21508

Drawn by [illegible] — Checked by: CEW

45

10-20-61
10-24-62 - Rails made continuous thru 3 posts

1010